CHROMALOX
Advanced Thermal Technologies

UL LISTED
FILE #E7061



SUBMITTAL SHEET
VUH Vertical Delivery Blower Heater

- 5 – 50 kW
- 17,060 – 170, 600 Btuh
- 208, 240, 277 & 480 Volt
- 1 or 3 Phase
- Diffusers Optional

See Selection Chart - Back Page

JOB NAME: _____

LOCATION: _____

ARCHITECT: _____

ENGINEER: _____

CONTRACTOR: _____

SUBMITTED BY: _____

QUANTITY: _____

DATE: _____

QTY.	CATALOG NUMBER	TAG	HEATER			AMPS	MOTOR VOLTS	PHASE Ø	MOTOR RPM	AIR FLOW		NO. OF STAGES	BUILT-IN-CONTROLS
			KW	VOLTS	Ø					CFM	°F RISE		

ACCESSORIES AND CONTROLS

QTY.	CATALOG NO.	TAG	DESCRIPTION

Chromalox • 103 Gamma Drive • Pittsburgh, Pennsylvania 15238 • Telephone: 412-967-3800 • Fax: 412-967-5148

© 2015 Chromalox, Inc.

SELECTION CHART

Electrical (60 Hz)				Motor				Air Delivery			Mtg. Height (In.)	Model	PCN	Wt. (Lbs.)
kW	Volts	Ckt & Phase	Amps	Volts	Phase	HP	RPM	CFM	FPM	Outlet Temp. (°F)				
5	208	1 - 1/3	24/14	208	1	1/25	1,550	450	730	102	10	VUH-05-83	300548	48
5	240	1 - 1/3	21/12	240	1	1/25	1,550	450	730	102	10	VUH-05-23	300556	48
5	277	1 - 1	18	277	1	1/25	1,550	450	730	102	10	VUH-05-71	300564	48
5	480	1 - 3	6	480	1	1/25	1,550	450	730	102	10	VUH-05-43	300572	48
7.5	208	1 - 1/3	36/21	208	1	1/25	1,550	550	880	102	12	VUH-07-83	300580	48
7.5	240	1 - 1/3	32/18	240	1	1/25	1,550	550	880	102	12	VUH-07-23	300599	48
7.5	277	1 - 1	27	277	1	1/25	1,550	550	880	102	12	VUH-07-71	300601	48
7.5	480	1 - 3	9	480	1	1/25	1,550	550	880	102	12	VUH-07-43	300610	48
9.8	208	1 - 1/3	42/27	208	1	1/25	1,550	712	1,160	104	14	VUH-10-83	300628	48
10	240	1 - 1/3	42/24	240	1	1/25	1,550	712	1,160	104	14	VUH-10-23	300636	48
10	277	1 - 1	36	277	1	1/25	1,550	712	1,160	104	14	VUH-10-71	300644	48
10	480	1 - 3	12	480	1	1/25	1,550	712	1,160	104	14	VUH-10-43	300652	48
15	208	1 - 3	42	208	3	1/6	1,725	1,300	1,600	93	25	VUH-15-83	300660	85
15	240	1 - 3	36	240	3	1/6	1,725	1,300	1,600	93	25	VUH-15-23	300679	85
15	480	1 - 3	18	480	3	1/6	1,725	1,300	1,600	93	25	VUH-15-43	300687	85
19.5	240	1 - 3	47	240	3	1/6	1,725	1,300	1,600	104	23	VUH-20-23	300695	85
20	480	1 - 3	24	480	3	1/6	1,725	1,300	1,600	104	23	VUH-20-43	300708	85
25	480	1 - 3	30	480	3	1/6	1,725	1,300	1,600	115	20	VUH-25-43	300716	85
30	208	2 - 3	83	208	3	1/3	1,140	2,500	1,200	96	33	VUH-30-83	300724	250
30	240	2 - 3	72	240	3	1/3	1,140	2,500	1,200	96	33	VUH-30-23	300732	250
30	480	1 - 3	36	480	3	1/3	1,140	2,500	1,200	96	33	VUH-30-43	300740	250
38.5	240	2 - 3	93	240	3	1/3	1,140	2,500	1,200	108	30	VUH-40-23	301110	250
39	480	1 - 3	47	480	3	1/3	1,140	2,500	1,200	108	30	VUH-40-43	300759	250
50	480	2 - 3	60	480	3	1/3	1,140	2,500	1,200	120	27	VUH-50-43	300767	250

Notes: —

A. VUH-05, 07 and 10 models 208 and 240V are factory wired for 3 phase operation and field convertible for 1 phase operation. Line and Amp ratings include motor Amps.

B. All stock 208 and 240V models have built-in contactors with 208/240V holding coils. All stock 277 and 480V models have built-in control transformer and contactors with 120V holding coil.

C. Fan only option is available for external control. Motor voltage is isolated through a motor relay which must be purchased separately. Control is pilot-duty 120V circuits. Optional heat recovery thermostat for economical recovery of stratified air may be used in conjunction with the fan only option by means of an AAR-219 thermostat. Thermostat to be mounted externally on the VUH junction box with capillary extended away from the heater to sense true ceiling air temperature.

D. All heaters are also available on special order with 24 or 120V relay holding coils with a built-in transformer. All models are also available with 24 or 120V relay holding coils for wiring to a separate 24 or 120V control circuit.

E. VUH-30, 40 and 50 models are equipped as standard with two integral relays. These heaters are shipped as standard for two-stage control but relay holding coil terminals may be jumpered in the field for single-stage control, if desired.

F. All fan motors are totally enclosed with thermal overload protection. 1/25 and 1/6 HP motors are all angle sleeve bearing type. 1/3 HP motors are ball bearing type.

G. Outlet temperature is based on 60°F entering air.

Dimensions (Inches)

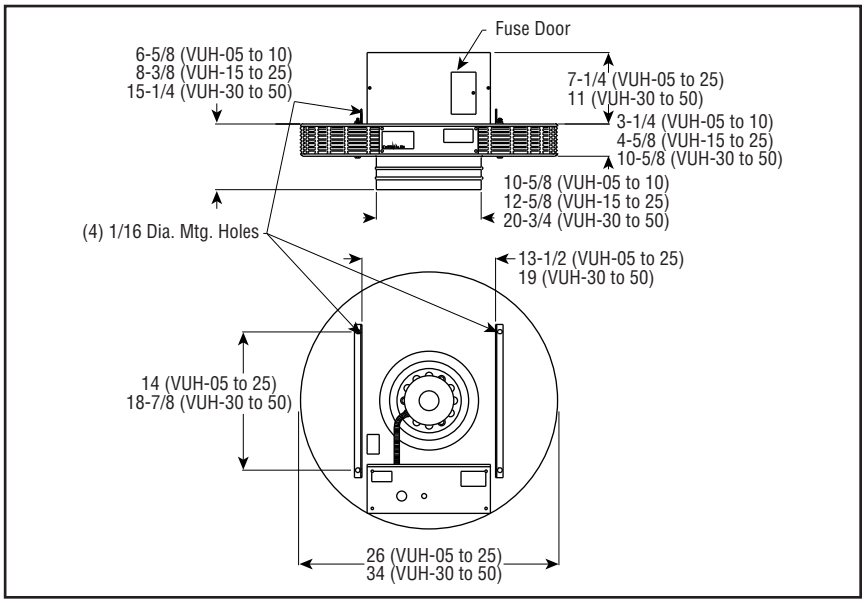

PERFORMANCE OF AIR OUTLETS

Diffuser — Specifications

Without Diffuser

VUH heaters are used without a diffuser where a straight downflow air pattern is required. However, any diffuser can be added to the basic heater

Radial

VUR increases floor coverage. Has adjustable fins which when turned to a vertical position, direct air downward in a pattern tighter than that of a heater without a diffuser. The heater can be mounted 15 to 20% higher than a heater with no diffuser, and will still maintain the same coverage at floor level. Conversely, when the fins are tilted to a 45° angle, floor coverage of warmed air is up to 25% greater (than no diffuser) at relatively low mounting heights.

Cone

VUC permits low mounting of the heater. Throws air outward over large area rather than downward. Cone can be lowered or raised to change the air flow pattern.

Louver

VUL permits directional (straight line) air flow such as in air curtain applications over dorways. Gives rectangular coverage. Louvers can be turned in either direction.

Anemostat

VUA "comfort" diffuser gives draft-free air movement at low mounting ehights. Floor coverage is same as heaters with no diffusers.

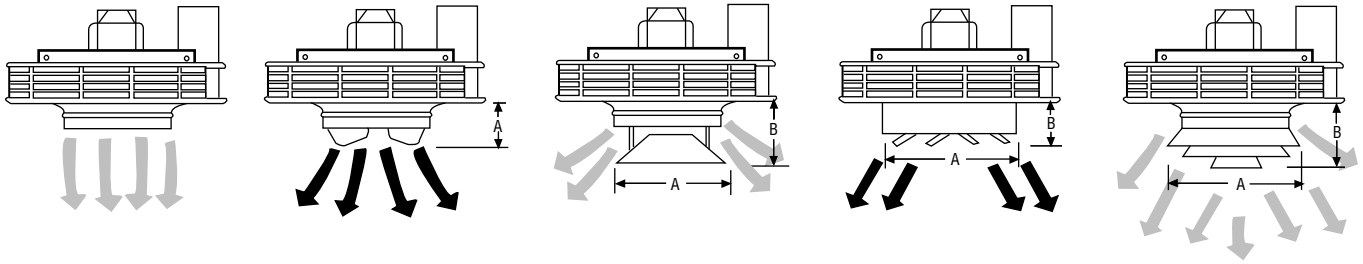

Diffuser — Specifications

Heater	Radial			Cone				Louver				Anemostat			
	Model	A	Wt. (Lbs.)	Model	A	B	Wt. (Lbs.)	Model	A	B	Wt. (Lbs.)	Model	A	B	Wt. (Lbs.)
VUH-05 to -10	VUR-ES	5	4	–	–	–	–	–	–	–	–	VUA-ES	17	5-7/8	4
VUH-05 to -15	–	–	–	VUC-S	16	13-1/4	3	VUL-S	16-1/8 sq	7-1/4	9	–	–	–	–
VUH-15	VUR-S	6-5/8	4	–	–	–	–	–	–	–	–	VUA-S	19-1/4	11-1/4	4
VUH-20 to -25	VUR-S	6-5/8	4	VUC-S	16	13-1/4	3	VUL-S	16-1/8 sq	7-1/4	9	VUA-S	19-1/4	11-1/4	4
VUH-30 to -50	VUR-L	9-1/2	5	VUC-L	22-1/2	16-7/8	7	VUL-L	16-1/8 sq	7-1/4		VUA-L	30-1/2	15-1/2	11

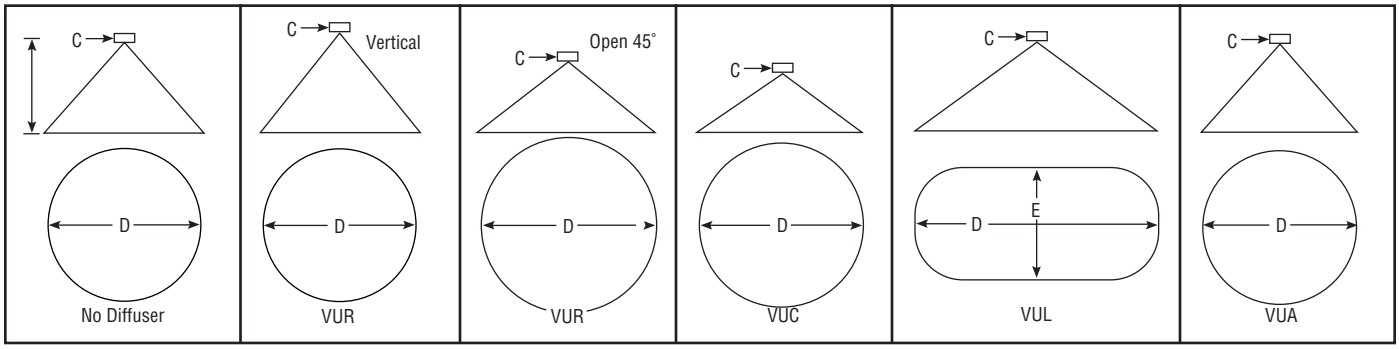

Heater	Dimensions (Ft.)												
	No Diffuser		VUR		VUR Open 45°		VUC		VUL			VUA	
	C	D	C	D	C	D	C	D	C	D	E	C	D
VUH-05	10	26	12	26	11	32	10	30	10	40	18	10	26
VUH-07	12	30	14	30	12.5	36	12	35	12	46	21	12	30
VUH-10	14	39	17	39	16	46	14	44	14	59	27	14	39
VUH-15	25	41	29	41	20	47	18	44	25	61	28	25	40
VUH-20	23	43	26.5	43	19	48	17	46	23	64	29	23	43
VUH-25	20	45	23	45	17	49	15	48	20	66	30	20	45
VUH-30	33	64	38	64	23	73	29	70	33	94	43	33	67
VUH-40	30	66	35	66	23	73	20	70	30	96	44	30	69
VUH-50	27	69	31	69	21	73	19	72	27	99	45	27	70

Notes — A. Mounting height and floor coverage data is approximate and depends upon the heater location and its surroundings, such as obstructions, drafts etc.
B. Specific location and mounting height will vary with the installation.

SUGGESTED ENGINEERING SPECIFICATIONS

Furnish and install Chromalox type VUH Vertical Unit Heaters with heating and air delivery capacities as shown on the heating schedule.

Electric heating elements shall consist of Chromalox metal sheath Fintubes® wired to built-in control contactor(s) whose holding coils are series connected with automatic reset circumferential overheat cutout.

Motor shall be totally enclosed continuous fan duty, all angle operation, sleeve or ball bearing type, equipped with built-in thermal overload protection. Each unit motor shall be fully protected from heating element radiation by baffle between motor and element. Motor shall be mounted on resilient base to absorb vibration and shall be wired to internally mounted power contactors, thus eliminating need for external motor starters or a separate fan motor circuit.

Fan shall be aluminum, direct connected to fan motor, dynamically balanced and designed specifically for efficient operation in type VUH unit heater.

Each heater shall be provided with a welded mounting frame consisting of steel angle supports attached directly to heater case and provided with four 11/16" diameter holes for field mounting.

All metal surfaces of casing shall be given phosphate treatment for corrosion resistance and paint adherence and shall be finished in almond color powder coat.

All heaters shall be U.L. and CSA listed and shall meet the requirements of the National Electrical Code.

Fan only switching shall be available to independently operate the fan motor for summer air circulation and winter heat recovery. Heat recovery thermostat shall be available for optimum energy utilization by automatically recirculating hot stratified air from ceiling to floor. Use thermostat (ARR-219) with capillary extended away from the heater to sense true ceiling air temperature for optimum utilization of stratified air.

(Optional) Unit shall be provided with diffuser type as shown on heating schedule.