CHROMALOX

UB
High Capacity Horizontal Blower Heater

- 2 - 50 kW
- 6,820 - 170,600 Btuh
- 120, 208, 240, 277, 480 and 550 Volt
- 1 or 3 Phase
- Wall or Ceiling Mounted Configurations

Description

Rugged, industrial UB heaters are ideal for factories, warehouses, garages or any other area that requires a high volume of forced-air heat.

Applications

- Entryway Air-Curtain Heating
- Power Generating Stations
- Factories
- Freeze Protection of Machinery

Construction (2 - 50 kW models)

Painted Finish — For attractive appearance and corrosion resistance.

Cabinet — 16 gauge steel cabinet construction supported with an 18 gauge base assembly and finished in almond powder.

Louvers — Adjustable discharge grille to direct the air flow up or down.

Heavy Gauge Rear Wire Grille protects against accidental contact with rapidly rotating fan blade.

Metal Sheath Fintube® Heating Elements — The electric heat bank - Chromalox patented metal sheath Fintube® heating elements. Heat radiation fins are corrosion-resistant copper-clad steel, furnace brazed to the tubular heating elements to assure superior heat transfer. Wide spacing prevents clogging. Air is evenly drawn across the circumferential elements preventing hot spots and prolonging element life.

Rugged Motor and Dynamically Balanced Fan provides a high volume of hot air.

Integral Automatic Reset Thermal Cutout for fast heat response and overheat protection.

Features (2 - 20 kW models)

Fan Only Operation — UB-23 and UB-32, (excluding the 120V UB-32), have a separate fan control switch for circulating air during summer months.

Totally Enclosed Fan Motor — Continuous duty with built-in automatic reset thermal overload protection operates on same voltage as supplied to the heater, except on 480 and 550 volt where motor is either 115 or 230 volts. All motors are single phase with sleeve bearings.

Heaters with model numbers having a suffix "T" include a transformer to stepdown the voltage for operating the fan motor.

External contactor is not necessary with heaters having a model number suffix "R".

Wall or Ceiling Mounting Brackets are available separately for field installation depending on mounting arrangement desired.

Features (25 - 50 kW models)

Universal Wall & Ceiling Mounting Bracket is included to provide flexibility in the mounting arrangement.

Fan Interlock — Fan motor contactor includes a set of auxiliary contacts to prevent heating elements from being energized unless contacts of fan motor contactor are closed.

Thermal Fan Delay allows fan motor to continue to operate after heating thermostat has been satisfied to maximize transfer of generated heat to space being heated and extend operating life of heating elements.

Built-in Controlling Contactors and Line Fusing — All heaters drawing 48 Amps or greater are sub-divided into two (2) circuits with built-in line fuses and controlling contactors. Units drawing less than 48 Amps have built-in contactors only, line fusing must be provided externally. All units regardless of amperage rating have built-in fuse protection for the motor and transformer.

Integral 120V Control Circuit — 120 volt power for the control circuit is provided from the unit mounted transformer to eliminate the need to run separate power to the unit for control.

Heavy Duty 1/3 HP Motor operates at 1,550 RPM on line voltage. Motor has built-in thermal overload protection, permanently lubricated ball bearings and factory installed line fuses for maximum trouble-free service life.

Advantages

- Low Maintenance
- High Capacity
- Primary Heating
- Supplementary Heating
- Dual System Heating
- Long Horizontal Air Throw
- Long Life

UB
High Capacity Horizontal Blower Heater *(cont'd.)*

Mounting Kits

For 2 -20 kW Heaters - Order Separately

Heater	Model	PCN
Ceiling Mounting Brackets		
UB-23 and 32	1-44419	264330
UB-502 and 752	2-44419	264348
UB-1002, 1252, 1502 and 2002	3-44419	264356
Wall Mounting Brackets		
UB-23 and 32	WUB-1	264305
UB-502 and 752	WUB-3	264313
UB-1002, 1252, 1502 and 2002	WUB-4	264321

For 25 - 50 kW Heaters - a Universal Wall & Ceiling Mounting Bracket is included.

Ceiling Mounting Kit (2-20 kW) – Dimensions (Inches)

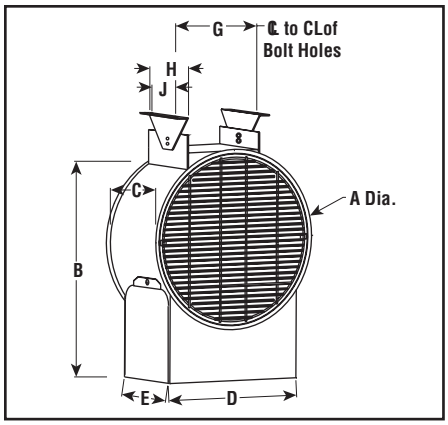

Wall Mounting Kit (2-20 kW) – Dimensions (Inches)

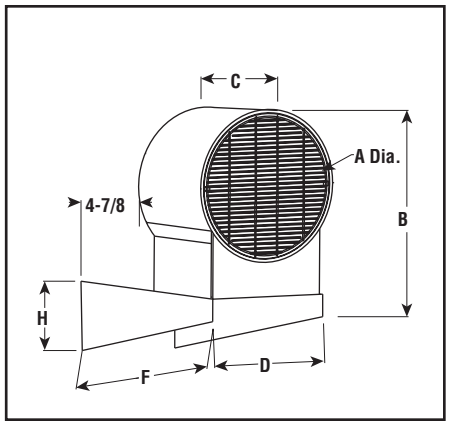

Ceiling Mounting Kit (25-50 kW) – Dimensions (Inches)

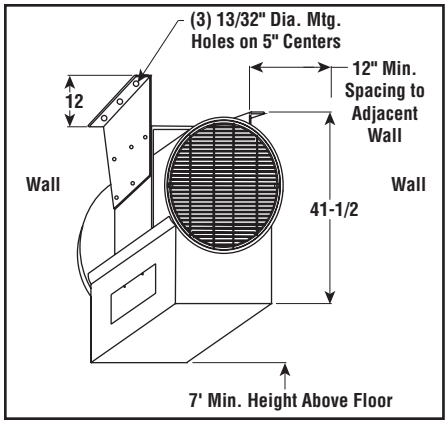

Wall Mounting Kit (25-50 kW) – Dimensions (Inches)

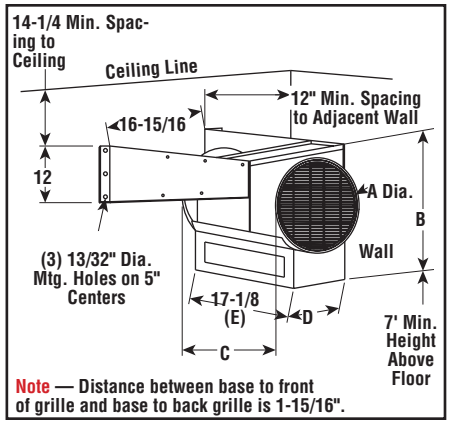

Dimensions (Inches)

Model	Dimensions (In.)								
	A	B	C	D	E	F	G	H	J
UB-23	10-3/8	13-1/2	8	6-7/16	3	11-3/8	9-7/16	6	4
UB-32	10-3/8	13-1/2	8	6-7/16	3	11-3/8	9-7/16	6	4
UB-502	13-5/8	17-3/16	13	8-7/16	7-9/16	15-9/16	11-7/8	8	6
UB-752	13-5/8	17-3/16	13	8-7/16	7-9/16	15-9/16	11-7/8	8	6
UB-1002	17-1/8	20-3/4	15-3/16	11-3/4	9-5/16	17-5/32	12-1/4	10	8
UB-1252	17-1/8	20-3/4	15-3/16	11-3/4	9-5/16	17-5/32	12-1/4	10	8
UB-1502	17-1/8	20-3/4	15-3/16	11-3/4	9-5/16	17-5/32	12-1/4	10	8
UB-2002	17-1/8	20-3/4	15-3/16	11-3/4	9-5/16	17-5/32	12-1/4	10	8
UB-2502	17-1/8	23-5/16	21	14	17-1/8	17-5/32	18-15/16	10	8
UB-3002	17-1/8	23-5/16	21	14	17-1/8	17-5/32	18-15/16	10	8
UB-3502	21-1/8	27-5/16	21	17-7/16	17-1/8	17-5/32	22-15/16	10	8
UB-4002	21-1/8	27-5/16	21	17-7/16	17-1/8	17-5/32	22-15/16	10	8
UB-4502	21-1/8	27-5/16	21	17-7/16	17-1/8	17-5/32	22-15/16	10	8
UB-5002	21-1/8	27-5/16	21	17-7/16	17-1/8	17-5/32	22-15/16	10	8

UB High Capacity Horizontal Blower Heater *(cont'd.)*

Electrical (60 Hz)				Motor					Air Delivery				Ordering			
kW	Volts	Phase	Amps	Volts	Phase	HP	RPM	CFM	FPM	Temp. Rise (°F)	Horiz. Throw (Ft.)	Mtg. Height (Ft.)	Model	Stock	PCN	Wt. (Lbs.)
2	120	1	16.7	115	1	1/15	1,550	316	657	21	10	8	**UB-23**	**S**	**261403**	13.5
2	208	1	9.6	208	1	1/15	1,550	316	657	21	10	8	UB-23	NS	261411	13.5
2	240	1	8.3	230	1	1/15	1,550	316	657	21	10	8	UB-23	NS	261420	13.5
3	120	1	25	115	1	1/15	1,550	316	657	31	10	8	**UB-32**	**S**	**261438**	13.5
3	208	1	14.4	208	1	1/15	1,550	316	657	31	10	8	**UB-32**	**S**	**261446**	13.5
3	240	1	12.5	230	1	1/15	1,550	316	657	31	10	8	**UB-32**	**S**	**261454**	13.5
5	120	1	41.7	115	1	1/15	1,050	405	430	40	12-1/2	8	UB-502D	NS	261462	43
5	208	1	24	208	1	1/15	1,050	405	430	40	12-1/2	8	UB-502D	NS	261489	43
5	240	1	20.8	230	1	1/15	1,050	405	430	40	12-1/2	8	UB-502D	NS	261500	43
5	550[1]	3	5.3	230	1	1/15	1,050	405	430	40	12-1/2	8	UB-502D	NS	285368	43
5	240	1	20.8	230	1	1/15	1,050	405	430	40	12-1/2	8	UB-502R	NS	264250	43
5	550[1]	3	5.3	115	1	1/15	1,050	405	430	40	12-1/2	8	UB-502	NS	266685	43
5	208	3	13.9	208	1	1/15	1,050	405	430	40	12-1/2	8	UB-502D	NS	261497	43
5	240	3	12	230	1	1/15	1,050	405	430	40	12-1/2	8	UB-502D	NS	261518	43
5	240	3	12	230	1	1/15	1,050	405	430	40	12-1/2	8	UB-502R	NS	269755	43
5	480	1	10.4	115	1	1/15	1,050	405	430	40	12-1/2	8	UB-502	NS	261526	43
5	480	1	10.4	230	1	1/15	1,050	405	430	40	12-1/2	8	UB-502	NS	269114	43
5	480	3	6	115	1	1/15	1,050	405	430	40	12-1/2	8	UB-502	NS	261534	43
5	480	3	6	115	1	1/15	1,050	405	430	40	12-1/2	8	**UB-502T**	**S**	**269704**	51
5	480	3	6	230	1	1/15	1,050	405	430	40	12-1/2	8	UB-502	NS	265199	43
5	480	3	6	115	1	1/15	1,050	405	430	40	12-1/2	8	UB-502R	NS	264268	43
5	480	3	6	230	1	1/15	1,050	405	430	40	12-1/2	8	UB-502T	NS	264233	51
7.5	208	1	36.1	208	1	1/15	1,050	590	640	37	13	8	UB-752	NS	261569	43
7.5	208	3	20.8	208	1	1/15	1,050	590	640	37	13	8	UB-752D	NS	261577	43
7.5	240	1	31.3	230	1	1/15	1,050	590	640	37	13	8	UB-752D	NS	261585	43
7.5	240	3	18.1	230	1	1/15	1,050	590	640	37	13	8	UB-752D	NS	261593	43
7.5	240	3	18.1	230	1	1/15	1,050	590	640	37	13	8	UB-752R	NS	264276	43
7.5	480	1	15.6	115	1	1/15	1,050	590	640	37	13	8	UB-752	NS	261606	43
7.5	480	1	15.6	230	1	1/15	1,050	590	640	37	13	8	UB-752	NS	269122	43
7.5	480	3	9	115	1	1/15	1,050	590	640	37	13	8	**UB-752**	**S**	**261614**	43
7.5	480	3	9	230	1	1/15	1,050	590	640	37	13	8	UB-752	NS	265228	43
7.5	480	3	9	230	1	1/15	1,050	590	640	37	13	8	UB-752R	NS	264292	43
7.5	480	3	9	115	1	1/15	1,050	590	640	37	13	8	UB-752T	NS	265324	51
7.5	480	3	9	115	1	1/15	1,050	590	640	37	13	8	UB-752R	NS	264284	43
7.5	480	3	9	230	1	1/15	1,050	590	640	37	13	8	UB-752T	NS	264241	51
7.5	550[1]	3	7.9	115	1	1/15	1,050	590	640	37	13	8	UB-752	NS	266693	43
7.5	550	3	7.9	230	1	1/15	1,050	590	640	37	13	8	UB-752	NS	285376	43
10	208[1]	1	48.1	208	1	1/15	1,050	1,180	800	28	40	9	UB-1002E	NS	261622	48
10	208	3	27.8	208	1	1/15	1,050	1,180	800	28	40	9	UB-1002	NS	261630	48
10	240	1	41.7	230	1	1/15	1,050	1,180	800	28	40	9	UB-1002	NS	261649	48
10	240	3	24.1	230	1	1/15	1,050	1,180	800	28	40	9	UB-1002E	NS	261657	48
10	480	1	20.1	115	1	1/15	1,050	1,180	800	28	40	9	UB-1002	NS	261665	48
10	480	3	12	115	1	1/15	1,050	1,180	800	28	40	9	UB-1002E	NS	261673	48
10	480	1	20.8	230	1	1/15	1,050	1,180	800	28	40	9	UB-1002	NS	265244	48
10	550[1]	3	10.5	115	1	1/15	1,050	1,180	800	28	40	9	UB-1002	NS	266706	48
10	480	3	12	230	1	1/15	1,050	1,180	800	28	40	9	UB-1002	NS	265236	48
10	550[1]	3	10.5	230	1	1/15	1,050	1,180	800	28	40	9	UB-1002	NS	285350	48
10	480	3	12	115	1	1/15	1,050	1,180	800	28	40	9	UB-1002T	NS	277843	56
10	480	3	12	230	1	1/15	1,050	1,180	800	28	40	9	UB-1002T	NS	277851	56
12.5	208	3	34.7	208	1	1/15	1,050	1,180	800	36	40	9	UB-1252	NS	261681	48
12.5	240[1]	1	52.1	230	1	1/15	1,050	1,180	800	36	40	9	UB-1252	NS	261690	48
12.5	240	3	30.1	230	1	1/15	1,050	1,180	800	36	40	9	UB-1252	NS	261702	48
12.5	480	1	26	115	1	1/15	1,050	1,180	800	36	40	9	UB-1252	NS	261710	48
12.5	480	1	26	230	1	1/15	1,050	1,180	800	36	40	9	UB-1252	NS	265260	48
12.5	480	3	15.1	115	1	1/15	1,050	1,180	800	36	40	9	UB-1252	NS	261729	48
12.5	480	3	15.1	230	1	1/15	1,050	1,180	800	36	40	9	UB-1252	NS	265252	48
15	208	3	41.7	208	1	1/15	1,050	1,330	900	32	45	10	UB-1502	NS	261737	52
15	240[1]	1	62.5	230	1	1/15	1,050	1,330	900	32	45	10	UB-1502	NS	261745	52
15	240	3	36.1	230	1	1/15	1,050	1,330	900	32	45	10	UB-1502	NS	261753	52
15	480	1	31.3	115	1	1/15	1,050	1,330	900	32	45	10	UB-1502	NS	261761	52
15	480	1	31.3	230	1	1/15	1,050	1,330	900	32	45	10	UB-1502	NS	265279	52
15	480	3	18.1	115	1	1/15	1,050	1,330	900	32	45	10	**UB-1502**	**S**	**261770**	52
15	480	3	18.1	230	1	1/15	1,050	1,330	900	32	45	10	UB-1502	NS	265295	52
15	480	3	18.1	115	1	1/15	1,050	1,330	900	32	45	10	**UB-1502E-T**	**S**	**266677**	60
15	550[1]	3	15.8	115	1	1/15	1,050	1,330	900	32	45	10	UB-1502	NS	264364	52
19.9	240	3	47.9	230	1	1/15	1,050	1,330	900	42	45	11	UB-2002	NS	261809	52
20	480	1	41.7	115	1	1/15	1,050	1,330	900	42	45	11	UB-2002	NS	261817	52
20	480	1	41.7	230	1	1/15	1,050	1,330	900	42	45	11	UB-2002	NS	265287	52
20	480	3	24.1	115	1	1/15	1,050	1,330	900	42	45	11	UB-2002	NS	261825	52
20	480	3	24.1	230	1	1/15	1,050	1,330	900	42	45	11	UB-2002	NS	265308	52
20	480	3	24.1	115	1	1/15	1,050	1,330	900	42	45	11	**UB-2002E-T**	**S**	**285384**	60
20	550[1]	3	21	115	1	1/15	1,050	1,330	900	42	45	11	UB-2002	NS	264372	52

UB High Capacity Horizontal Blower Heater *(cont'd.)*

Electrical (60 Hz)				Motor					Air Delivery				Ordering			
kW	Volts	Phase	Amps	Volts	Phase	HP	RPM	CFM	FPM	Temp. Rise (°F)	Horiz. Throw (Ft.)	Mtg. Height (Ft.)	Model	Stock	PCN	Wt. (Lbs.)
25	240	3	60.2	115	1	1/3	1,550	1,300	825	64	48	12	UB-2502	NS	332558	185
25	240	3	60.2	115	1	1/3	1,550	1,300	825	64	48	12	UB-2502	NS	332566	185
25	240	3	60.2	230	1	1/3	1,550	1,300	825	64	48	12	UB-2502	NS	332574	185
25	240	3	60.2	230	1	1/3	1,550	1,300	825	64	48	12	UB-2502	NS	332582	185
25	480	3	30.1	115	1	1/3	1,550	1,300	825	64	48	12	UB-2502	NS	332590	185
25	480	1	52.1	115	1	1/3	1,550	1,300	825	64	48	12	UB-2502	NS	332603	185
25	480	1	52.1	230	1	1/3	1,550	1,300	825	64	48	12	UB-2502	NS	332611	185
25	480	1	52.1	230	1	1/3	1,550	1,300	825	64	48	12	UB-2502	NS	332620	185
25	480	1	52.1	115	1	1/3	1,550	1,300	825	64	48	12	UB-2502	NS	332638	185
25	480	3	30.1	115	1	1/3	1,550	1,300	825	64	48	12	UB-2502	NS	332646	185
25	480	3	30.1	230	1	1/3	1,550	1,300	825	64	48	12	UB-2502	NS	332654	185
25	480	3	30.1	230	1	1/3	1,550	1,300	825	64	48	12	UB-2502	NS	332662	185
25	480	3	30.1	460	3	1/3	1,725	1,450	920	57	48	12	UB-2502	NS	332670	185
25	480	3	30.1	460	3	1/3	1,725	1,450	920	57	48	12	UB-2502	NS	332689	185
25	480	3	30.1	115	1	1/3	1,550	1,300	825	64	48	12	UB-2502	NS	332697	185
25	550	3	26.3	115	1	1/3	1,550	1,300	825	64	48	12	UB-2502	NS	332700	185
25	550	3	26.3	230	1	1/3	1,550	1,300	825	64	48	12	UB-2502	NS	332718	185
25	550	3	26.3	230	1	1/3	1,550	1,300	825	64	48	12	UB-2502	NS	332726	185
25	575	3	26.3	115	1	1/3	1,550	1,300	825	64	48	12	UB-2502	NS	332734	185
25	575	3	26.3	115	1	1/3	1,550	1,300	825	64	48	12	UB-2502	NS	332742	185
25	575	3	26.3	230	1	1/3	1,550	1,300	825	64	48	12	UB-2502	NS	332750	185
25	575	3	26.3	230	1	1/3	1,550	1,300	825	64	48	12	UB-2502	NS	332769	185
25	600	3	24.1	115	1	1/3	1,550	1,300	825	64	48	12	UB-2502	NS	332777	185
25	600	3	24.1	115	1	1/3	1,550	1,300	825	64	48	12	UB-2502	NS	332785	185
25	600	3	24.1	230	1	1/3	1,550	1,300	825	64	48	12	UB-2502	NS	332793	185
25	600	3	24.1	230	1	1/3	1,550	1,300	825	64	48	12	UB-2502	NS	332806	185
30	240	3	72.3	115	1	1/3	1,550	1,300	825	77	48	13	UB-3002	NS	332814	185
30	240	3	72.3	115	1	1/3	1.550	1,300	825	77	48	13	UB-3002	NS	332822	185
30	240	3	72.3	230	1	1/3	1,550	1,300	825	77	48	13	UB-3002	NS	332830	185
30	240	3	72.3	230	1	1/3	1,550	1,300	825	77	48	13	UB-3002	NS	332849	185
30	480	1	62.5	115	1	1/3	1,550	1,300	825	77	48	13	UB-3002	NS	332857	185
30	480	1	62.5	115	1	1/3	1,550	1,300	825	77	48	13	UB-3002	NS	332865	185
30	480	1	62.5	230	1	1/3	1,550	1,300	825	77	48	13	UB-3002	NS	332873	185
30	480	1	62.5	230	1	1/3	1,550	1,300	825	77	48	13	UB-3002	NS	332881	185
30	480	3	36.1	115	1	1/3	1,550	1,300	825	77	48	13	UB-3002	NS	332890	185
30	480	3	36.1	115	1	1/3	1,550	1,300	825	77	48	13	UB-3002	NS	332902	185
30	480	3	36.1	230	1	1/3	1,550	1,300	825	77	48	13	UB-3002	NS	332910	185
30	480	3	36.1	230	1	1/3	1,550	1,300	825	77	48	13	UB-3002	NS	332929	185
30	480	3	36.1	460	3	1/3	1,725	1,450	920	69	48	13	UB-3002	NS	332937	185
30	480	3	36.1	460	3	1/3	1,725	1,450	920	69	48	13	UB-3002	NS	332945	185
30	550	3	31.5	115	1	1/3	1,550	1,300	825	77	48	13	UB-3002	NS	332953	185
30	550	3	31.5	115	1	1/3	1,550	1,300	825	77	48	13	UB-3002	NS	332961	185
30	550	3	31.5	230	1	1/3	1,550	1,300	825	77	48	13	UB-3002	NS	332970	185
30	550	3	31.5	230	1	1/3	1,550	1,300	825	77	48	13	UB-3002	NS	332988	185
30	575	3	30.2	115	1	1/3	1,550	1,300	825	77	48	13	UB-3002	NS	332996	185
30	575	3	30.2	115	1	1/3	1,550	1,300	825	77	48	13	UB-3002	NS	333008	185
30	575	3	30.2	230	1	1/3	1,550	1,300	825	77	48	13	UB-3002	NS	333016	185
30	575	3	30.2	230	1	1/3	1,550	1,300	825	77	48	13	UB-3002	NS	333024	185
30	600	3	28.9	115	1	1/3	1,550	1,300	825	77	48	13	UB-3002	NS	333032	185
30	600	3	28.9	115	1	1/3	1,550	1,300	825	77	48	13	UB-3002	NS	333040	185
30	600	3	28.9	230	1	1/3	1,550	1,300	825	77	48	13	UB-3002	NS	333059	185
30	600	3	28.9	230	1	1/3	1,550	1,300	825	77	48	13	UB-3002	NS	333067	185
35	240	3	84.3	230	1	1/3	1,550	2,500	1,040	47	54	14	UB-3502	NS	333075	210
35	240	3	84.3	230	1	1/3	1,550	2,500	1,040	47	54	14	UB-3502	NS	333083	210
35	480	1	72.9	115	1	1/3	1,550	2,500	1,040	47	54	14	UB-3502	NS	333091	210
35	480	1	72.9	115	1	1/3	1,550	2,500	1,040	47	54	14	UB-3502	NS	333104	210
35	480	1	72.9	230	1	1/3	1,550	2,500	1,040	47	54	14	UB-3502	NS	333112	210
35	480	1	72.9	230	1	1/3	1,550	2,500	1,040	47	54	14	UB-3502	NS	333120	210
35	480	3	42.2	115	1	1/3	1,550	2,500	1,040	47	54	14	UB-3502	NS	333139	210
35	480	3	42.2	115	1	1/3	1,550	2,500	1,040	47	54	14	UB-3502	NS	333147	210
35	480	3	42.2	230	1	1/3	1,550	2,500	1,040	47	54	14	UB-3502	NS	333155	210
35	480	3	42.2	230	1	1/3	1,550	2,500	1,040	47	54	14	UB-3502	NS	333163	210
35	480	3	42.2	460	3	1/3	1,725	2,800	1,165	42	54	14	UB-3502	NS	333171	210
35	480	3	42.2	460	3	1/3	1,725	2,800	1,165	42	54	14	UB-3502	NS	333180	210
35	550	3	36.8	115	1	1/3	1,550	2,500	1,040	47	54	14	UB-3502	NS	333198	210
35	550	3	36.8	115	1	1/3	1,550	2,500	1,040	47	54	14	UB-3502	NS	333200	210
35	550	3	36.8	230	1	1/3	1,550	2,500	1,040	47	54	14	UB-3502	NS	333219	210
35	550	3	36.8	230	1	1/3	1,550	2,500	1,040	47	54	14	UB-3502	NS	333227	210
35	575	3	35.2	115	1	1/3	1,550	2,500	1,040	47	54	14	UB-3502	NS	333235	210
35	575	3	35.2	115	1	1/3	1,550	2,500	1,040	47	54	14	UB-3502	NS	333243	210
35	575	3	35.2	230	1	1/3	1,550	2,500	1,040	47	54	14	UB-3502	NS	333251	210
35	575	3	35.2	230	1	1/3	1,550	2,500	1,040	47	54	14	UB-3502	NS	333260	210
35	600	3	33.7	115	1	1/3	1,550	2,500	1,040	47	54	14	UB-3502	NS	333278	210

UB High Capacity Horizontal Blower Heater *(cont'd.)*

Electrical (60 Hz)				Motor					Air Delivery				Ordering			
kW	Volts	Phase	Amps	Volts	Phase	HP	RPM	CFM	FPM	Temp. Rise (°F)	Horiz. Throw (Ft.)	Mtg. Height (Ft.)	Model	Stock	PCN	Wt. (Lbs.)
35	600	3	33.7	115	1	1/3	1,550	2,500	1,040	47	54	14	UB-3502	NS	333286	210
35	600	3	33.7	230	1	1/3	1,550	2,500	1,040	47	54	14	UB-3502	NS	333294	210
35	600	3	33.7	230	1	1/3	1,550	2,500	1,040	47	54	14	UB-3502	NS	333307	210
40	480	1	83.3	115	1	1/3	1,550	2,500	1,040	53	54	15	UB-4002	NS	333315	210
40	480	1	83.3	115	1	1/3	1,550	2,500	1,040	53	54	15	UB-4002	NS	333323	210
40	480	1	83.3	230	1	1/3	1,550	2,500	1,040	53	54	15	UB-4002	NS	333331	210
40	480	1	83.3	230	1	1/3	1,550	2,500	1,040	53	54	15	UB-4002	NS	333340	210
40	480	3	48.2	115	1	1/3	1,550	2,500	1,040	53	54	15	UB-4002	NS	333358	210
40	480	3	48.2	115	1	1/3	1,550	2,500	1,040	53	54	15	UB-4002	NS	333366	210
40	480	3	48.2	230	1	1/3	1,550	2,500	1,040	53	54	15	UB-4002	NS	333374	210
40	480	3	48.2	230	1	1/3	1,500	2,500	1,040	53	54	15	UB-4002	NS	333382	210
40	480	3	48.2	460	3	1/3	1,725	2,800	1,165	48	54	15	UB-4002	NS	333390	210
40	480	3	48.2	460	3	1/3	1,725	2,800	1,165	48	54	15	UB-4002	NS	333403	210
40	550	3	42	115	1	1/3	1,550	2,500	1,040	53	54	15	UB-4002	NS	333411	210
40	550	3	42	115	1	1/3	1,550	2,500	1,040	53	54	15	UB-4002	NS	333420	210
40	550	3	42	230	1	1/3	1,550	2,500	1,040	53	54	15	UB-4002	NS	333438	210
40	550	3	42	230	1	1/3	1,550	2,500	1,040	53	54	15	UB-4002	NS	333446	210
40	575	3	40.2	115	1	1/3	1,550	2,500	1,040	53	54	15	UB-4002	NS	333454	210
40	575	3	40.2	115	1	1/3	1,550	2,500	1,040	53	54	15	UB-4002	NS	333462	210
40	575	3	40.2	230	1	1/3	1,550	2,500	1,040	53	54	15	UB-4002	NS	333470	210
40	575	3	40.2	230	1	1/3	1,550	2,500	1,040	53	54	15	UB-4002	NS	333489	210
40	600	3	38.5	115	1	1/3	1,550	2,500	1,040	53	54	15	UB-4002	NS	333497	210
40	600	3	38.5	115	1	1/3	1,550	2,500	1,040	53	54	15	UB-4002	NS	333500	210
40	600	3	38.5	230	1	1/3	1,550	2,500	1,040	53	54	15	UB-4002	NS	333518	210
40	600	3	38.5	230	1	1/3	1,550	2,500	1,040	53	54	15	UB-4002	NS	333526	210
45	480	1	93.8	230	1	1/3	1,550	2,500	1,040	60	54	17	UB-4502	NS	333534	210
45	480	1	93.8	230	1	1/3	1,550	2,500	1,040	60	54	17	UB-4502	NS	333542	210
45	480	3	54.2	115	1	1/3	1,550	2,500	1,040	60	54	17	UB-4502	NS	333550	210
45	480	3	54.2	115	1	1/3	1,550	2,500	1,040	60	54	17	UB-4502	NS	333569	210
45	480	3	54.2	230	1	1/3	1,550	2,500	1,040	60	54	17	UB-4502	NS	333577	210
45	480	3	54.2	230	1	1/3	1,550	2,500	1,040	60	54	17	UB-4502	NS	333585	210
45	480	3	54.2	460	3	1/3	1,725	2,800	1,165	54	54	17	UB-4502	NS	333593	210
45	480	3	54.2	460	3	1/3	1,725	2,800	1,165	54	54	17	UB-4502	NS	333606	210
45	550	3	47.3	115	1	1/3	1,550	2,500	1,040	60	54	17	UB-4502	NS	333614	210
45	550	3	47.3	115	1	1/3	1,550	2,500	1,040	60	54	17	UB-4502	NS	333622	210
45	550	3	47.3	230	1	1/3	1,550	2,500	1,040	60	54	17	UB-4502	NS	333630	210
45	550	3	47.3	230	1	1/3	1,550	2,500	1,040	60	54	17	UB-4502	NS	333649	210
45	575	3	45.2	115	1	1/3	1,550	2,500	1,040	60	54	17	UB-4502	NS	333657	210
45	575	3	45.2	115	1	1/3	1,550	2,500	1,040	60	54	17	UB-4502	NS	333665	210
45	575	3	45.2	230	1	1/3	1,550	2,500	1,040	60	54	17	UB-4502	NS	333673	210
45	575	3	45.2	230	1	1/3	1,550	2,500	1,040	60	54	17	UB-4502	NS	333681	210
45	600	3	43.4	115	1	1/3	1,550	2,500	1,040	60	54	17	UB-4502	NS	333690	210
45	600	3	43.4	115	1	1/3	1,550	2,500	1,040	60	54	17	UB-4502	NS	333702	210
45	600	3	43.4	230	1	1/3	1,550	2,500	1,040	60	54	17	UB-4502	NS	333710	210
45	600	3	43.4	230	1	1/3	1,550	2,500	1,040	60	54	17	UB-4502	NS	333729	210
50	480	3	60.2	115	1	1/3	1,550	2,500	1,040	67	54	17	UB-5002	NS	333737	210
50	480	3	60.2	115	1	1/3	1,550	2,500	1,040	67	54	17	UB-5002	NS	333745	210
50	480	3	60.2	230	1	1/3	1,550	2,500	1,040	67	54	17	UB-5002	NS	333753	210
50	480	3	60.2	230	1	1/3	1,550	2,500	1,040	67	54	17	UB-5002	NS	333761	210
50	480	3	60.2	460	3	1/3	1,725	2,800	1,165	60	54	17	UB-5002	NS	333770	210
50	480	3	60.2	460	3	1/3	1,725	2,800	1,165	60	54	17	**UB-5002**	**S**	**333788**	210
50	550	3	52.5	115	1	1/3	1,550	2,500	1,040	67	54	17	UB-5002	NS	333796	210
50	550	3	52.5	115	1	1/3	1,550	2,500	1,040	67	54	17	UB-5002	NS	333809	210
50	550	3	52.5	230	1	1/3	1,550	2,500	1,040	67	54	17	UB-5002	NS	333817	210
50	550	3	52.5	230	1	1/3	1,550	2,500	1,040	67	54	17	UB-5002	NS	333825	210
50	575	3	50.3	115	1	1/3	1,550	2,500	1,040	67	54	17	UB-5002	NS	333833	210
50	575	3	50.3	115	1	1/3	1,550	2,500	1,040	67	54	17	UB-5002	NS	333841	210
50	575	3	50.3	230	1	1/3	1,550	2,500	1,040	67	54	17	UB-5002	NS	333850	210
50	575	3	50.3	230	1	1/3	1,550	2,500	1,040	67	54	17	UB-5002	NS	333868	210
50	600	3	48.2	115	1	1/3	1,550	2,500	1,040	67	54	17	UB-5002	NS	333876	210
50	600	3	48.2	115	1	1/3	1,550	2,500	1,040	67	54	17	UB-5002	NS	333884	210
50	600	3	48.2	230	1	1/3	1,550	2,500	1,040	67	54	17	UB-5002	NS	333892	210
50	600	3	48.2	230	1	1/3	1,550	2,500	1,040	67	54	17	UB-5002	NS	333905	210

Stock Status: **S** = stock NS = non-stock
To Order—Specify model, PCN, kW, volts, phase and quantity.

1. Not UL Listed.

Other Note — Up to 600V available, contact your Local Chromalox Sales office.