SL-B
Silicone Rubber Enclosure & Air Heater



- All Models Stocked
- 25, 50, 100 and 200 Watts
- 120 Volts
- Vulcanized to Mounting Plate for Easy Installation
- Custom Design and Thermostats Available
- Air Temperature Sensing Thermostats (40˚F close, 55˚F open) available

Description

Type SL-B Silicone Rubber Insulated Enclosure Heaters and General Purpose Air Heaters are used for freeze protection and condensate protection in electrical enclosures. They are also installed in equipment to keep mechanical components functioning in applications such as ATM machines and automatic doors. Shipment can be made within 24 hours from receipt of order.

Features

- 10" Lead Length is standard
- 25, 50, 100 and 200 watt heaters available with or without integral air temperature sensing thermostat.
- All stock heaters operate on 120V. Heaters requiring other voltages up to 600V are available as non-stock items however special thermostats with be required.
- Easy installation. Consult Chromalox with Bracket and Mounting Slots
- Integral or remote air temperature sensing thermostats ensure heater operation in condensation forming and other air heating application conditions.

Applications

Freeze or condensation protection in enclosures containing electronic equipment, such as: Temperature Control Panels, Control Valve Housings, ATMs, Traffic Signal Boxes. Also, General Purpose Air Heating applications.

Specifications

Watts	Dimensions (In.)		
	Heated Surface	Plate Size	Mounting Surface
25	2 x 5	2.5 x 5	0.5 x 5
50	2 x 5	2.5 x 5	0.5 x 5
100	2 x 10	2.5 x 10	0.5 x 10
200	4 x 10	4.5 x 10	0.5 x 10

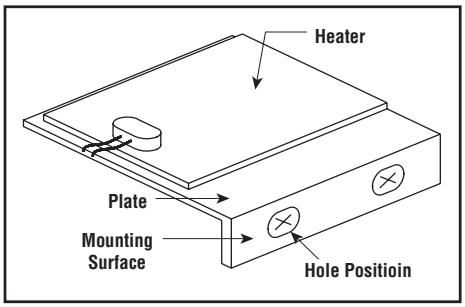

Installation

The SL-B enclosure heaters are factory vulcanized to an aluminum mounting plate that allows for easy installation. The mounting surface is perpendicular to the heater and has two tapped mounting Holes. If using the heater with the integral thermostat, vertical mounting with the sensor towards the base of the enclosure is recommended.

Model	Volts	Watts	PCN
Enclosure w/In-line Thermostat, (40°F)			
SL-B-2-5-55P	120	25	122622
SL-B-2-5-55P	120	50	122606
SL-B-2-10-55P	120	100	122585
SL-B-4-10-55P	120	200	123297
Enclosure without Thermostat			
SL-B-2-5-O	120	25	122614
SL-B-2-5-O	120	50	122593
SL-B-2-10-O	120	100	122577
SL-B-4-10-O	120	200	123300
Field Installable Thermostat Kit, (40°F)			
T-N-55P-Kit	—	—	122657

Custom DIN Rail Mounting

SL-B enclosure heaters can be provided with a DIN Rail mounting clip for easy installation within a control enclosure.

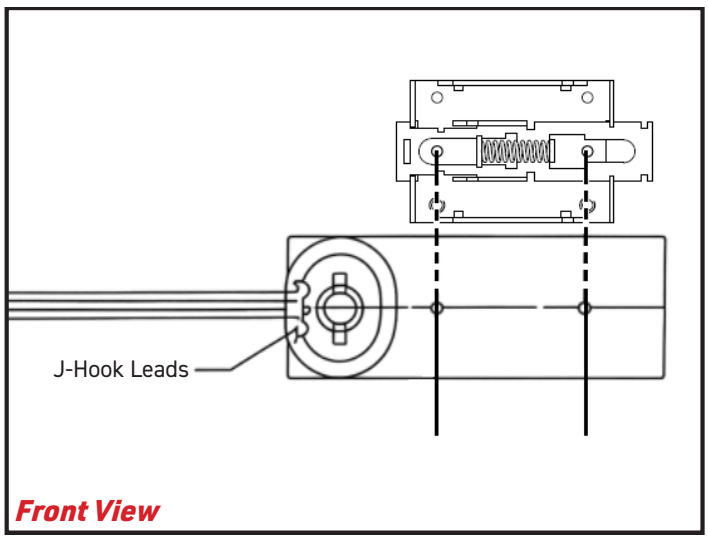

Front View

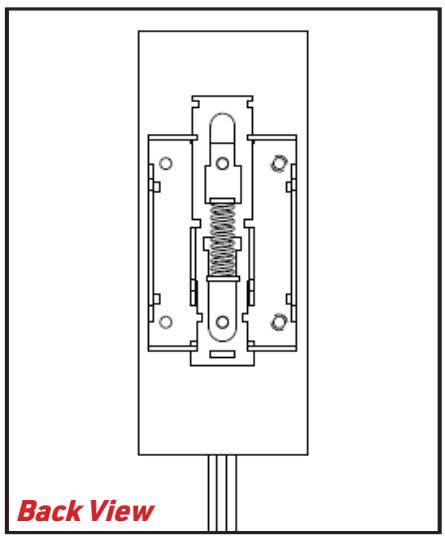

Back View

SL-B
Silicone Rubber Enclosure & Air Heater

Determining Minimum Recommended Wattage

°F Above Ambient	Total Surface Area (Ft^2)													
	2	3	4	5	6	7.5	9	10	15	20	25	30	40	50
Uninsulated Enclosures														
20	30	40	55	70	80	100	120	135	205	270	335	405	540	670
40	55	80	110	135	160	200	245	270	405	540	670	805	1,075	1,340
60	90	120	160	205	245	300	365	405	605	805	1,005	1,210	1,610	2,010
80	110	160	215	270	325	400	485	540	805	1,075	1,340	1,610	2,145	2,680
100	135	200	270	335	405	500	605	670	1,005	1,340	1,675	2,010	2,680	3,350
120	165	240	320	405	485	600	725	805	1,210	1,610	2,010	2,415	3,220	4,020
140	190	280	375	470	565	700	845	940	1,410	1,880	2,345	2,815	3,775	4,690
Insulated Enclosures														
20	10	10	15	20	20	25	30	35	50	65	80	100	130	160
40	15	20	30	35	40	50	60	65	100	130	160	195	260	320
60	20	30	55	50	60	75	90	100	145	195	240	290	385	480
80	30	40	55	65	80	100	115	130	195	260	320	320	515	640
100	35	50	65	80	100	125	145	160	240	320	400	400	640	800
120	40	60	80	100	115	150	175	195	290	385	480	480	770	960
140	45	70	90	115	135	175	205	225	340	450	560	560	900	1,120

Notes –

1) Unit conversions: A. °F = (°C x1.8) + 32 B. Ft^2 = 0.092 x m^2
2) Contact Chromalox for enclosures with surface areas larger than 50ft^2.
3) In most cases multiple heaters should be used in applications requiring wattages greater than 500 watts. This is especially true for heaters with in-line thermostats as they can be affected by thermal gradient. Contact Chromalox for more information.