CHROMALOX

HVH

Horizontal or Vertical Discharge Fan Forced Unit Heater

- 2.6 - 50 kW
- 8,900 – 170,600 Btuh
- 208, 240, 277, 480, and 600 volt
- 1 or 3 phase
- Vertical or Horizontal Airflow
- Wall or Ceiling Mounted Configurations
- CSA Certified to US and Canadian Standards
- CE Certified to European Standards

Description

The Chromalox HVH self-contained blower heater provides quiet, reliable, fan-forced heat for all types of commercial and industrial applications. The hallmark of the HVH blower heater is its versatility. It can provide vertical or horizontal airflow and can be mounted on walls or ceilings. Optional wall or ceiling swivel mounting brackets help direct airflow exactly where it is needed. Heavy-duty construction affords long, dependable service, while its two-tone gray polyester powder coat finish makes an attractive appearance.

Applications

- Shipping and Receiving Areas
- Pump Houses
- Power Generating Stations
- Aircraft Hangars
- Factories
- Warehouses
- Garages

Construction

Cabinet – Heavy 20-gauge steel, 2.6 to 15 kW models; 18-gauge steel, 25 to 50 kW models. Phosphate undercoated for corrosion resistance. Finished in a two-tone gray polyester powder coat.

Louvers – Individually adjustable. Direct airflow up or down as needed. Fintube® Heating Elements Corrosion resistant steel fins furnace-brazed to a tubular heating element, assuring long life and superior heat transfer.

Fan Motor – Totally enclosed fan motor is rated for continuous duty with built-in thermal cutout and operates on the same voltage as the heating circuit.

Dynamically Balanced Fan – Ensures smooth, quiet operation. Blade pitch is carefully selected so that the volume of air moved results in the optimum discharge air temperature. Pull-through airflow design draws air across heating elements for more even airflow distribution and cooler element operation.

Features

- **Integral 24V Control Transformer** is standard on 480V models and eliminates the need for an external control source(120V is optional).
- **Heavy Duty Magnetic Contactors** are standard on all models except 2.6 thru 5 kW single phase models, except for 480V models .
- **Linear Thermal Cutouts** open the control circuit and disconnect power to the heating elements if overheating occurs. Automatic Reset allows the control circuit to reclose and restore power when temperature returns to normal.
- **Field Convertible** — Combination 208/240V and 1 or 3 phase operation through 10 kW.

VERSATILE MOUNTING CONFIGURATIONS

Vertical Discharge Recessed fasteners on the rear of the heater cabinet are internally threaded for suspension of unit in the vertical discharge mode with threaded rods.

Horizontal Discharge Ceiling Bracket – The ceiling bracket allows you mount the heater directly to the ceiling or over-head member, simply and easily. The swivel mounting allows you to readily adjust the direction of warm air flow for maximum comfort up to 180˚ rotation.

Wall Mounting Bracket – The wall mounting brackets permits the heater to be rotated to face any direction.

Factory Installed or Field Installation Kits

Summer Fan Switch Kit – Field installable for circulating warm, stratified air. Available for all models.

Thermostat Kit – Field installable on all models. Range 40° to 100°F (4° to 38°C).

Disconnect Switch Kits – Field-installable switch enables power to be disconnected while servicing heater. Mounts on the front of the heater.

Outlet Screen – Prevents objects from coming in contact with fan

Factory Installed

- Pilot Light (recommended)
- Time Delay (heat on and off):Provides delay of fan operation until elements have warmed up. The fan stays on until cool.
  Available for 24v or 120v control voltage.

Advantages

- Self Contained
- Versatile, Flexible and High Performance
- Easy Installation
- Minimum Maintenance
- Long Life
- Attractive Appearance

Because it has individually adjustable discharge louvers to direct air flow, and can be wall or ceiling (plus swivel) mounted, the HVH heater may be used in a variety of heating applications:

- Primary Heating
- Supplementary Heating
- Dual System Heating
- Spot Heating
- Entryway Air-Curtain Heating

HVH

Horizontal or Vertical Discharge Fan Forced Unit Heater *(cont'd.)*

Thermostat Kits (40-90˚F)

Model	Rating	PCN	Stock
TK-5	SPST	219475	S

Available Disconnect Switch Kits

Model	Rating	PCN	Stock
HDS-1	63 Amps	219491	S
HDS-2	80 Amps	219790	NS
HDS-3	100 Amps	219803	NS

Horizontal Discharge

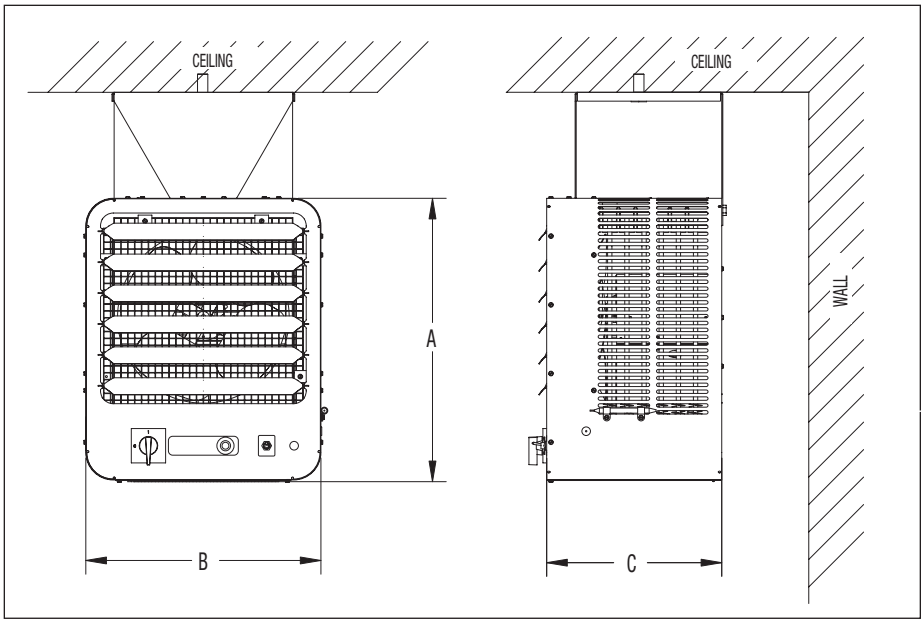

Heater	Dimensions In. (mm)		
	A	B	C
HVH-02 to 05 (Except 600 V)	16-1/8 (410)	13 (330)	10 (254)
HVH-07 to 15 (Except 600 V)	20-5/8 (524)	17-1/8 (435)	12-3/4 (324)
HVH 02 to 15 (600 V)	20-5/8 (524)	17-1/8 (435)	12-3/4 (324)
HVH-20 (All Voltages)	20-5/8 (524)	17-1/8 (435)	12-3/4 (324)
HVH-25 to 50 (All Voltages)	29-3/16 (741)	26-1/16 (662)	14-5/8 (371)

Rod Thread Type and Spacing Dimensions for Vertical discharge

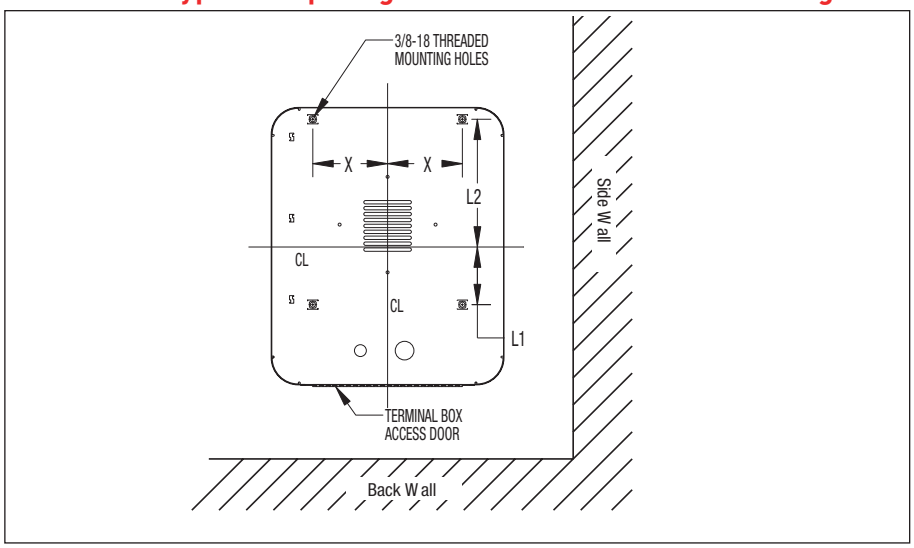

Unit	Rod Thread Type	Dimensions In. (mm)		
		L_1	L_2	X
2 to 5 kW	3/8 - 16	2-7/8 (73)	7-1/8 (181)	3-3/4 (95)
7-1/2 to 20 kW	3/8 - 16	4-5/16 (110)	9-3/8 (238)	5-1/2 (140)
25 to 50 kW	3/8 - 16	8-5/16 (211)	14 (356)	9-15/16 (252)

Mounting Limitations

Hazardous Atmosphere — Unit heaters should not be used in potentially explosive atmospheres. ***Corrosive Atmosphere*** —The finish is not intended for direct salt spray exposure in marine applications or the highly corrosive atmospheres of greenhouses, swimming pools, chemical storage bins, etc. ***Mounting Height*** — Do not install unit heaters above recommended maximum mounting height. Obstructions must not block unit heater air inlet or discharge.

HVH

Horizontal or Vertical Discharge Fan Forced Unit Heater *(cont'd.)*

Optional Wall Swivel Mounting Bracket

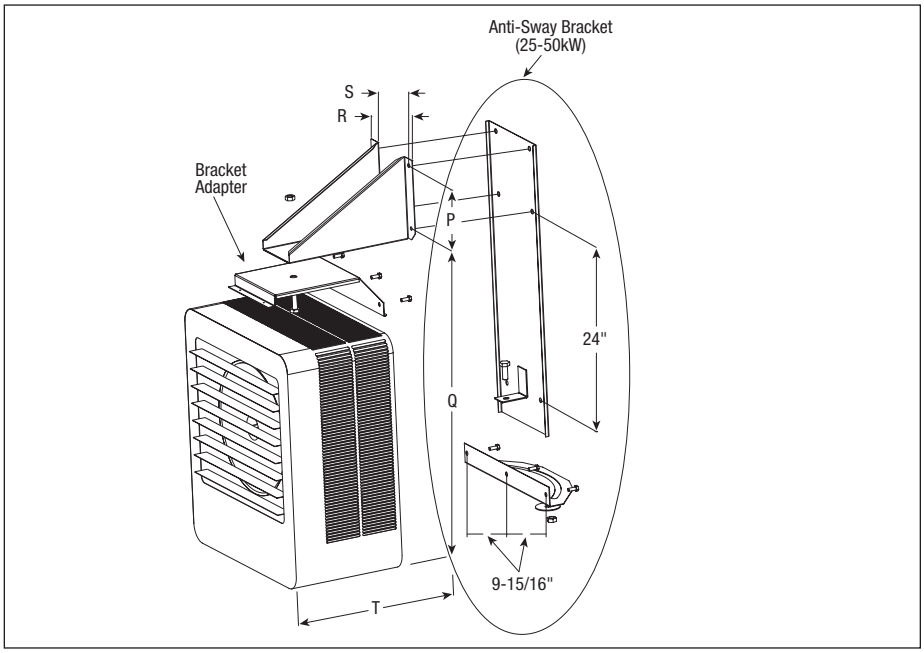

Bracket Model No.	Dimensions In. (mm)					Bracket Wt. lbs. (kg.)	Use With
	P	Q	R	S	T		
HVW-1	6 (152)	18-7/8 (479)	7 (178)	5 (127)	17-5/8 (448)	4 (1.8)	HVH-02 to 05
HVW-2	6 (152)	23-1/4 (591)	7 (178)	5 (127)	18-5/8 (473)	6 (2.7)	HVH-07 to 15
HVW-3	6 (152)	23-7/16 (595)	7 (178)	5 (127)	20-1/16 (510)	6 (2.7)	HVH-02 to 15 (600 V), HVH-20 (All Voltages)
HVW-4	8 (203)	23-13/16 (605)	10-3/8 (264)	8-1/2 (216)	22-7/16 (570)	27 (12.3)	HVH-25 to 50

Optional Ceiling Swivel Mounting Bracket

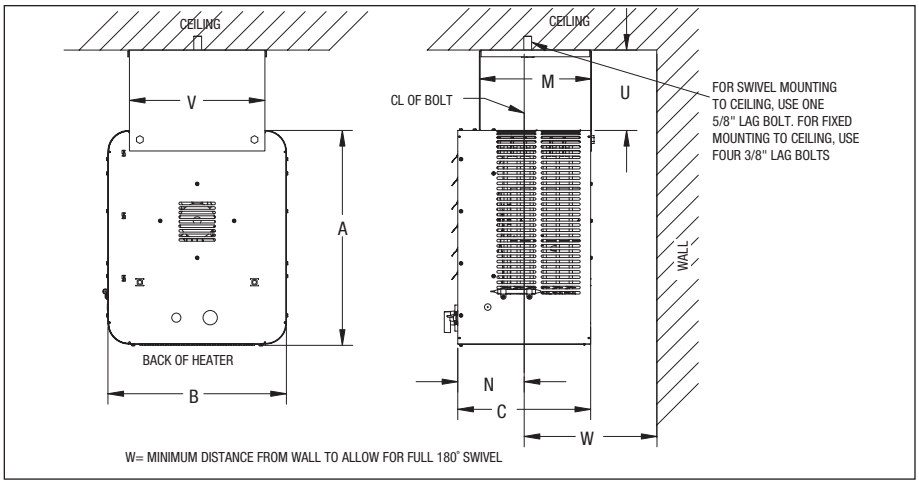

Bracket Model No.	Dimensions In. (mm)								Bracket Wt. lbs. (kg.)	Use With
	A	B	C	M	N	U	V	W		
HVC-1	16-1/8 (410)	13 (330)	10 (254)	8-3/8 (213)	5-3/4 (146)	7-3/4 (197)	9-3/4 (248)	12 (305)	4 (1.8)	HVH-02, 04, 05
HVC-2	20-5/8 (524)	17-1/8 (435)	12-3/4 (324)	10-3/4 (273)	6-3/4 (171)	7-3/4 (197)	12 (305)	12 (305)	8 (3.6)	HVH-07, 10, 12, 15
HVC-3	20-5/8 (524)	17-1/8 (435)	14-1/16 (357)	12-1/16 (306)	8-1/16 (205)	7-3/4 (197)	13-5/16 (338)	8 (203)	8 (3.6)	HVH-02 to 15 (600V) HVH-20 (All Voltages)
HVC-4	29-13/16 (757)	26-1/16 (662)	14-5/8 (371)	11-3/4 (298)	8-3/16 (208)	7-3/4 (197)	22-5/16 (567)	8-7/16 (214)	17 (7.7)	HVH-25 to 50

Optional Fan Only Kits

Description	Model	PCN	Stock
Fan switch (no relay)	HVF-01	**219504**	**S**
Fan switch (24V relay)	HVF-02	219512	NS
Fan switch (120V relay)	HVF-03	219520	NS

CHROMALOX

HVH Horizontal or Vertical Discharge Fan Forced Unit Heater

Electrical (60 Hz)					Motor					Air Delivery				Ordering			
kW	Volts	Ckt & Phase	Amps	Control Volts	Volts	Phase	HP	RPM	Air Flow f^3/min (m^3/hr)	Air Speed ft/min (m/min)	Temp. Rise °F (°C)	Horiz. Throw ft.(m)	Mtg.[5] Height ft.(m)	Model	Stock	PCN	Wt. lbs.(kg)
2.6	208	1-1	13.1	N/A	208	1	1/40	1,650	410 (697)	880 (268.2)	21 (11.7)	12 (3.7)	8 (2.4)	**HVH-02-81-00**	**S**	**219096**	32 (14.5)
2/2.6	208/240	1-1	11.4[2]	N/A	240	1	1/40	1,650	410 (697)	880 (268.2)	21 (11.7)	12 (3.7)	8 (2.4)	**HVH-02-21-00**	**S**	**219109**	32 (14.5)
2.6	277	1-1	9.6	N/A	277	1	1/30	1,550	360 (612)	770 (234.7)	24 (13.3)	12 (3.7)	8 (2.4)	**HVH-02-71-00**	**S**	**219117**	32 (14.5)
4	208	1-1	19.8	N/A	208	1	1/40	1,650	410 (697)	880 (268.2)	31 (17.2)	12 (3.7)	8 (2.4)	**HVH-04-81-00**	**S**	**219125**	32 (14.5)
4	208	1-3[3]	11.7	208/240	208	1	1/40	1,650	410 (697)	880 (268.2)	31 (17.2)	12 (3.7)	8 (2.4)	**HVH-04-83-34**	**S**	**219133**	32 (14.5)
3/4	208/240	1-1	17.2[2]	N/A	240	1	1/40	1,650	410 (697)	880 (268.2)	31 (17.2)	12 (3.7)	8 (2.4)	**HVH-04-21-00**	**S**	**219141**	32 (14.5)
3/4	208/240	1-3	10.2[2]	208/240	240	1	1/40	1,650	410 (697)	880 (268.2)	31 (17.2)	12 (3.7)	8 (2.4)	**HVH-04-23-34**	**S**	**219150**	32 (14.5)
4	277	1-1	14.6	N/A	277	1	1/30	1,550	360 (612)	770 (234.7)	35 (19.4)	12 (3.7)	8 (2.4)	**HVH-04-71-00**	**S**	**219168**	32 (14.5)
4	480	1-3	5.1	24	480	1	1/35	1,550	380 (646)	815 (248.4)	33 (18.3)	12 (3.7)	8 (2.4)	**HVH-04-43-30**	**S**	**219176**	32 (14.5)
5	208	1-1	24.6	N/A	208	1	1/40	1,650	410 (697)	880 (268.2)	39 (21.7)	12 (3.7)	8 (2.4)	**HVH-05-81-00**	**S**	**219184**	32 (14.5)
5	208	1-3[3]	14.5	208/240	208	1	1/40	1,650	410 (697)	880 (268.2)	39 (21.7)	12 (3.7)	8 (2.4)	**HVH-05-83-34**	**S**	**219192**	32 (14.5)
3.75/5	208/240	1-1	21.4	N/A	240	1	1/40	1,650	410 (697)	880 (268.2)	39 (21.7)	12 (3.7)	8 (2.4)	**HVH-05-21-00**	**S**	**219205**	32 (14.5)
3.75/5	208/240	1-3[3]	12.6	208/240	240	1	1/40	1,650	410 (697)	880 (268.2)	39 (21.7)	12 (3.7)	8 (2.4)	**HVH-05-23-34**	**S**	**219213**	32 (14.5)
5	277	1-1	18.3	N/A	277	1	1/30	1,550	360 (612)	770 (234.7)	44 (24.4)	12 (3.7)	8 (2.4)	**HVH-05-71-00**	**S**	**219221**	32 (14.5)
5	480	1-3	6.3	24	480	1	1/35	1,550	380 (646)	815 (248.4)	42 (23.3)	12 (3.7)	8 (2.4)	**HVH-05-43-30**	**S**	**219230**	32 (14.5)
7.5	208	1-1[3]	36.5	208/240	208	1	1/15	1,725	850 (1444)	1040 (317.0)	28 (15.6)	27 (8.2)	8 (2.4)	**HVH-07-81-34**	**S**	**219248**	50 (22.7)
7.5	208	1-3	21.3	208/240	208	1	1/15	1,725	850 (1444)	1040 (317.0)	28 (15.6)	27 (8.2)	8 (2.4)	**HVH-07-83-34**	**S**	**219256**	50 (22.7)
5.6/7.5	208/240	1-1[3]	31.7[2]	208/240	240	1	1/15	1,725	850 (1444)	1040 (317.0)	28 (15.6)	27 (8.2)	8 (2.4)	**HVH-07-21-34**	**S**	**219264**	50 (22.7)
5.6/7.5	208/240	1-3	18.5[2]	208/240	240	1	1/15	1,725	850 (1444)	1040 (317.0)	28 (15.6)	27 (8.2)	8 (2.4)	**HVH-07-23-34**	**S**	**219272**	50 (22.7)
7.5	277	1-1	27.7	24	277	1	1/15	1,550	750 (1274)	920 (280.4)	32 (17.8)	27 (8.2)	8 (2.4)	**HVH-07-71-30**	**S**	**219280**	50 (22.7)
7.5	480	1-3	9.9	24	480	3	1/15	1,725	850 (1444)	1040 (317.0)	28 (15.6)	27 (8.2)	8 (2.4)	**HVH-07-43-30**	**S**	**219299**	50 (22.7)
7.5	600	1-3	7.6	24	575	3	1/3	1,725	850 (1444)	1040 (317.0)	28 (15.6)	27 (8.2)	8 (2.4)	HVH-07-63-30	NS	—	50 (22.7)
9.7	208	1-1[3]	47.1	208/240	208	1	1/15	1,725	850 (1444)	1040 (317.0)	37 (20.6)	27 (8.2)	9 (2.7)	**HVH-10-81-34**	**S**	**219301**	50 (22.7)
9.7	208	1-3	27.4	208/240	208	1	1/15	1,725	850 (1444)	1040 (317.0)	37 (20.6)	27 (8.2)	9 (2.7)	**HVH-10-83-34**	**S**	**219310**	50 (22.7)
7.5/10	208/240	1-1[3]	42.1[2]	208/240	240	1	1/15	1,725	850 (1444)	1040 (317.0)	37 (20.6)	27 (8.2)	9 (2.7)	**HVH-10-21-34**	**S**	**219328**	50 (22.7)
7.5/10	208/240	1-3	24.5[2]	208/240	240	1	1/15	1,725	850 (1444)	1040 (317.0)	37 (20.6)	27 (8.2)	9 (2.7)	**HVH-10-23-34**	**S**	**219336**	50 (22.7)
10	480	1-3	12.9	24	480	3	1/15	1,725	850 (1444)	1040 (317.0)	37 (20.6)	27 (8.2)	9 (2.7)	**HVH-10-43-30**	**S**	**219344**	50 (22.7)
10	600	1-3	10.6	24	575	3	1/3	1,725	850 (1444)	1040 (317.0)	37 (20.6)	27 (8.2)	9 (2.7)	HVH-10-63-30	NS	—	50 (22.7)
12.5	208	1-3	35.2	208/240	208	1	1/15	1,725	850 (1444)	1040 (317.0)	47 (26.1)	27 (8.2)	9 (2.7)	**HVH-12-83-34**	**S**	**219352**	50 (22.7)
9.3/12.5	208/240	1-3	30.6	208/240	240	1	1/15	1,725	850 (1444)	1040 (317.0)	47 (26.1)	27 (8.2)	9 (2.7)	**HVH-12-23-34**	**S**	**219360**	50 (22.7)
12.5	480	1-3	15.9	24	480	3	1/15	1,725	850 (1444)	1040 (317.0)	47 (26.1)	27 (8.2)	9 (2.7)	**HVH-12-43-30**	**S**	**219379**	50 (22.7)
12.5	600	1-3	12.6	24	575	3	1/3	1,725	850 (1444)	1040 (317.0)	47 (26.1)	27 (8.2)	9 (2.7)	HVH-12-63-30	NS	—	50 (22.7)
15	208	1-3	42.1	208/240	208	1	1/15	1,725	850 (1444)	1040 (317.0)	56 (31.1)	27 (8.2)	10 (3.0)	**HVH-15-83-34**	**S**	**219387**	50 (22.7)
11.25/15	208/240	1-3	36.6[2]	208/240	240	1	1/15	1,725	850 (1444)	1040 (317.0)	56 (31.1)	27 (8.2)	10 (3.0)	**HVH-15-23-34**	**S**	**219395**	50 (22.7)
15	480	1-3	19.0	24	480	3	1/15	1,725	850 (1444)	1040 (317.0)	56 (31.1)	27 (8.2)	10 (3.0)	**HVH-15-43-30**	**S**	**219408**	50 (22.7)
15	600	1-3	15.6	24	575	3	1/3	1,725	850 (1444)	1040 (317.0)	56 (31.1)	27 (8.2)	10 (3.0)	HVH-15-63-30	NS	—	50 (22.7)
14.7/19.8	208/240	1-3	47.7	24	240	3	1/3	1,725	1500 (2549)	1750 (533.4)	49 (27.2)	27 (8.2)	13 (4.0)	HVH-20-23-30	NS	219563	65 (29.5)
19.8	480	1-3	23.9	24	480	3	1/3	1,725	1500 (2549)	1750 (533.4)	49 (27.2)	27 (8.2)	13 (4.0)	HVH-20-43-30	NS	219571	65 (29.5)
19.8	600	1-3	19.4	24	575	3	1/3	1,725	1500 (2549)	1750 (533.4)	49 (27.2)	27 (8.2)	13 (4.0)	HVH-20-63-30	NS	219580	65 (29.5)
18.7/24.9	208/240	1-3	60.1	24	240	3	1/3	1,725	2500 (4248)	1650 (502.9)	27 (15.0)	36 (11.0)	13 (4.0)	HVH-25-23-30	NS	219598	90 (40.9)
25.0	480	1-3	30.2	24	480	3	1/3	1,725	2500 (4248)	1650 (502.9)	27 (15.0)	36 (11.0)	13 (4.0)	HVH-25-43-30	NS	219600	90 (40.9)
25.0	600	1-3	24.3	24	575	3	1/3	1,725	2500 (4248)	1650 (502.9)	27 (15.0)	36 (11.0)	13 (4.0)	HVH-25-63-30	NS	219619	90 (40.9)
22.4/29.9	208/240	1-3	72	24	240	3	1/3	1,725	2500 (4248)	1650 (502.9)	34 (18.9)	36 (11.0)	13 (4.0)	HVH-30-23-30	NS	219627	90 (40.9)
30.0	480	1-3	36.2	24	480	3	1/3	1,725	2500 (4248)	1650 (502.9)	34 (18.9)	36 (11.0)	13 (4.0)	HVH-30-43-30	NS	219635	90 (40.9)
30.0	600	1-3	29	24	575	3	1/3	1,725	2500 (4248)	1650 (502.9)	34 (18.9)	36 (11.0)	13 (4.0)	HVH-30-63-30	NS	219643	90 (40.9)
25.6/34.0	208/240	1-3	82.1	24	240	3	1/3	1,725	3100 (5267)	2100 (640.1)	40 (22.2)	36 (11.0)	13 (4.0)	HVH-35-23-30	NS	219651	90 (40.9)
34.0	480	1-3	41.1	24	480	3	1/3	1,725	3100 (5267)	2100 (640.1)	40 (22.2)	36 (11.0)	13 (4.0)	HVH-35-43-30	NS	219660	90 (40.9)
34.2	600	1-3	33	24	575	3	1/3	1,725	3100 (5267)	2100 (640.1)	40 (22.2)	36 (11.0)	13 (4.0)	HVH-35-63-30	NS	219678	90 (40.9)
28.1/37.4	208/240	1-3	90.1	24	240	3	1/3	1,725	3100 (5267)	2100 (640.1)	45 (25.0)	36 (11.0)	16 (4.9)	HVH-40-23-30	NS	219686	100 (45.5)
37.4	480	1-3	45.1	24	480	3	1/3	1,725	3100 (5267)	2100 (640.1)	45 (25.0)	36 (11.0)	16 (4.9)	HVH-40-43-30	NS	219694	100 (45.5)
37.5	600	1-3	36.2	24	575	3	1/3	1,725	3100 (5267)	2100 (640.1)	45 (25.0)	36 (11.0)	16 (4.9)	HVH-40-63-30	NS	219707	100 (45.5)
33.7/44.8	208/240	1-3	108	24	240	3	1/3	1,725	3100 (5267)	2100 (640.1)	51 (28.3)	36 (11.0)	16 (4.9)	HVH-45-23-30	NS	219715	100 (45.5)
44.8	480	1-3	54	24	480	3	1/3	1,725	3100 (5267)	2100 (640.1)	51 (28.3)	36 (11.0)	16 (4.9)	HVH-45-43-30	NS	219723	100 (45.5)
45.2	600	1-3	43.6	24	575	3	1/3	1,725	3100 (5267)	2100 (640.1)	51 (28.3)	36 (11.0)	16 (4.9)	HVH-45-63-30	NS	219731	100 (45.5)
38.4/51.1	208/240	1-3	123.1	24	240	3	1/3	1,725	3100 (5267)	2100 (640.1)	57 (31.7)	36 (11.0)	16 (4.9)	HVH-50-23-30	NS	219740	100 (45.5)
51.1	480	1-3	61.6	24	480	3	1/3	1,725	3100 (5267)	2100 (640.1)	57 (31.7)	36 (11.0)	16 (4.9)	HVH-50-43-30	NS	219758	100 (45.5)
51.3	600	1-3	49.5	24	575	3	1/3	1,725	3100 (5267)	2100 (640.1)	57 (31.7)	36 (11.0)	16 (4.9)	HVH-50-63-30	NS	219766	100 (45.5)

Stock Status: S = Stock NS = Non-Stock.
To order specify model, PCN, kW, volts, phase and quantity.

1. For motor data, see table.
2. 208V amperage is 86% of 240V value.
3. Models can be field wired for 1 or 3 phase.
4. Includes motor amps.
5. Max. mounting height for effective heat distribution. Min. height is 7 ft.

Other Notes:

A. All heaters have built-in contactors except 2.6 kW thru 5 kW single phase models, and stock 480V models have built-in control transformers and contactors with 24V holding coils. Stock 208V and 240V, 3 phase models, 4 kW through 15 kW, have 208/240V holding coils while stock 208V and 240V 3 phase models above 15 kW have 24V holding coils. All stock 277V models have 277V holding coils.

B. Optional contactors holding coil voltages of 24V or 120V and control voltage transformers, are available as made-to-order models for all heater ratings.

HVH Horizontal or Vertical Discharge Fan Forced Unit Heater

Recommended Control Options

Heater		Field Installed Options																	Factory Installed Options	
		Wall Bracket Options				Ceiling Bracket Options				Outlet Screen Options			Ther-mostat Options	Disconnect Options			Fan Switch Options			
Model No.	PCN	HVW-1 219416	HVW-2 219424	HVW-3 219782	HVW-4 219820	HVC-1 219432	HVC-2 219440	HVC-3 219811	HVC-4 219838	HVS-1 219459	HVS-2 219467	HVS-3 219774	TK-5 219475	HDS-1 219491	HDS-2 219790	HDS-3 219803	HVF-01 219504	HVF-02 219512	HFD-1[a]	PL-1[b]
HVH-02-81-00	219096	X				X				X				X						X
HVH-02-21-00	219109	X				X				X				X						X
HVH-02-71-00	219117	X				X				X				X						
HVH-04-81-00	219125	X				X				X				X						X
HVH-04-83-34	219133	X				X				X			X	X			X			X
HVH-04-21-00	219141	X				X				X				X						X
HVH-04-23-34	219150	X				X				X			X	X			X			X
HVH-04-71-00	219168	X				X				X				X						X
HVH-04-43-30	219176	X				X				X			X	X			X		X	X
HVH-05-81-00	219184	X				X				X				X						X
HVH-05-83-34	219192	X				X				X			X	X			X			X
HVH-05-21-00	219205	X				X				X				X						X
HVH-05-23-34	219213	X				X				X			X	X			X			X
HVH-05-71-00	219221	X				X				X				X						
HVH-05-43-30	219230	X				X				X			X	X			X		X	X
HVH-07-81-34	219248		X				X				X		X	X			X			X
HVH-07-83-34	219256		X				X				X		X	X			X			X
HVH-07-21-34	219264		X				X				X		X	X			X			X
HVH-07-23-34	219272		X				X				X		X	X			X			X
HVH-07-71-30	219280		X				X				X		X	X			X		X	
HVH-07-43-30	219299		X				X				X		X	X			X	X	X	X
HVH-10-81-34	219301		X				X				X		X	X			X			X
HVH-10-83-34	319310		X				X				X		X	X			X			X
HVH-10-21-34	219328		X				X				X		X	X			X			X
HVH-10-23-34	219336		X				X				X		X	X			X			X
HVH-10-43-30	219344		X				X				X		X	X			X	X	X	X
HVH-12-83-34	219352		X				X				X		X	X			X			X
HVH-12-23-34	219360		X				X				X		X	X			X			X
HVH-12-43-30	219379		X				X				X		X	X			X	X	X	X
HVH-15-83-34	219387		X				X				X		X	X			X			X
HVH-15-23-34	219395		X				X				X		X	X			X			X
HVH-15-43-30	219408		X				X				X		X	X			X	X	X	X
HVH-20-23-30	219563			X				X			X		X	X			X		X	X
HVH-20-43-30	219571			X				X			X		X	X			X		X	X
HVH-20-63-30	219580			X				X			X		X	X			X		X	X
HVH-25-23-30	219598				X				X			X	X		X		X		X	X
HVH-25-43-30	219600				X				X			X	X	X			X		X	X
HVH-25-63-30	219619				X				X			X	X	X			X		X	X
HVH-30-23-30	219627				X				X			X	X			X	X		X	X
HVH-30-43-30	219635				X				X			X	X	X			X		X	X
HVH-30-63-30	219643				X				X			X	X	X			X		X	X
HVH-35-23-30 [c]	219651				X				X			X	X				X		X	X
HVH-35-43-30	219660				X				X			X	X	X			X		X	X
HVH-35-63-30	219678				X				X			X	X	X			X		X	X
HVH-40-23-30 [c]	219686				X				X			X	X				X		X	X
HVH-40-43-30	219694				X				X			X	X	X			X		X	X
HVH-40-63-30	219707				X				X			X	X	X			X		X	X
HVH-45-23-30 [c]	219715				X				X			X	X				X		X	X
HVH-45-43-30	219723				X				X			X	X		X		X		X	X
HVH-45-63-30	219731				X				X			X	X		X		X		X	X
HVH-50-23-30 [c]	219740				X				X			X	X				X		X	X
HVH-50-43-30	219758				X				X			X	X		X		X		X	X
HVH-50-63-30	219766				X				X			X	X		X		X		X	X

Notes:

A. HFD-1 is a fan delay on / fan delay off. Fan delay is standard on heaters 20 kW and above

B. PL-1 is a green pilot indicating power to heater

C. Factory installed disconnect switch not available

D. Field installed thermostat kits not available on models with control code 00.

HVH Horizontal or Vertical Discharge Fan Forced Unit Heater

When ordering HVH heaters, specify the model number and corresponding PCN (Product Code Number). If controls (thermostat, fan switch, transformer , discon - nect) or other options are required, designate these options in the model number when ordering, as shown below. Always specify voltage, phase and kW by listing them on the purchase order specifications.

HVH — **Horizontal or Vertical Discharge Blower Heater**

kW

02	2.6 kW	**20**	19.8 kW
04	4.0 k W	**25**	25.0 kW
05	5.0 kW	**30**	30.0 kW
07	7.5 kW	**35**	33.3 kW
10	10.0 kW	**40**	37.5 kW
12	12.5 kW	**45**	45.0 kW
15	15.0 kW	**50**	50.0 kW

Volts

2	240V
4	480V
6	600V
7	277V
8	208V
A	220V
B	380V
C	400V
D	415V

Phase

1	1
3	3

Control

00	No Contactor
30	Contactor with 24V Transformer
31	Contactor with 24V Externally Supplied
32	Contactor with 120V Transformer
33	Contactor with 120V Externally Supplied
34	Contactor with 208/240V Internally Supplied
35	Contactor with 277V Internally Supplied

Integral Thermostat

0	None
TL	40-100˚F Range (4° to 38°C)

Disconnect Switch

0	None
D	Yes

Fan Only Switch

00	None
FI	Internal (In Heater)
FE	External (On Wall)

Time Delay (Standard on 20kW and above)

0	None
R	Yes **(Available for 24v or 120v control voltage.)**

Pilot Light

0	None
P	Yes

Outlet Screen

0	None
S	Yes

HVH	**05**	**2**	**1**	**34**	**TL**	**D**	**FI**	**-0**	**-0**	**-0**	**Typical Model Number**

Note: 20-50 kW models available in 208/240, 480, and 600 V only.
Units with thermostats must include built-in contactor.