GNIT
Non-Indicating Thermostat

- **For Some Corrosive Environment Applications**
- **5' or 12' Teflon® Sleeved Bulb & Capillary**
- **Plastic, Gasketed Enclosure Resists Corrosion**
- **Adjustable Setpoint Dial, 30 to 220˚F**
- **Double Pole, Single Throw Contacts**
- **25 Amps, 120 - 240 Vac**
- **Accuracy ± 9˚F**

WARNING: Hazard of Fire. These devices function as temperature controls only. Because they do not fail-safe, an approved temperature and/or pressure safety control must be used for safe operation.

Description

The GNIT Non-Indicating Temperature Controller provides ON/OFF control of temperature ranges from 30 to 220˚F for temperature regulation of aqueous solutions. The plastic, gasketed, moisture-resistant enclosure and Teflon® covered sensor and capillary make it an excellent choice for most corrosive industrial environments.

Features

- Double pole, single throw contacts open on temperature rise
- Standard PI terminal blocks included
- ± 9˚F Accuracy, Full Span
- Operating Ambient 30 - 150˚F

Dimensions

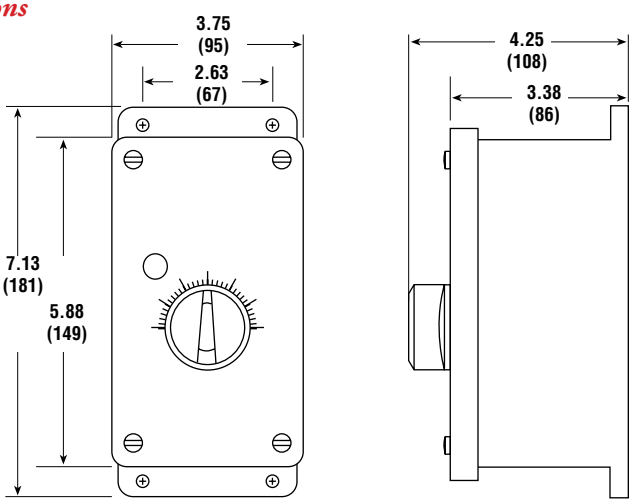

Front View

Side View

All Dimensions in Inches (mm)

Specifications and Ordering Information

Model	PCN	Temperature Range (˚F)	Volts	Max. Amps	Sensor Length (Ft.)	Stock
GNIT-5	**360946**	30 - 220	120/240	25	5	**S**
GNIT-12	**360954**	30 - 220	120/240	25	12	**S**

Stock Status: **S** = stock NS = non-stock