CHROMALOX

DRA

Portable Industrial Salamander Blower Heater



- 7.5 to 30 kW
- 25,590 to 102,360 BTUH
- 208, 240, 480 and 600 Volts
- No Assembly Required
- Built-in Controls

Dimensions (Inches)

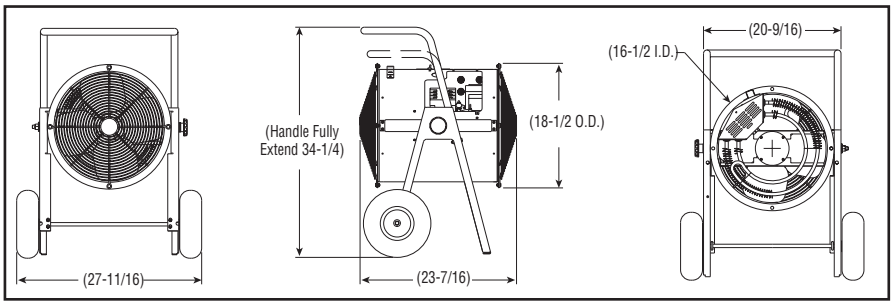

Description

The Chromalox DRA Dragon is a rugged industrial grade, self contained, highly mobile, electric blower heater. The DRA can be left unattended without the threat of poisoning from combustion by-products associated with fuel fired heaters. The built in safety features include an adjustable thermostat to control the outlet air temperature, auto-reset cutouts for the fan motor and heating elements. The thermostat provides settings for full off, fan only and temperature control in the heating setting. Dragon heaters feature a large, easily accessible control and wiring compartment containing a magnetic contactor; additional safety is provided by a 120 volt control voltage transformer and motor starter on 480 and 600 volt units. The bright red polyester powder coated heating cylinder is highly visible and can be rotated to direct heat or fan driven air movement where it is needed. For assured safety, all standard units meet the requirements of UL (File No. E7061) and CSA (File No. LR40859).

Construction

Heating Cylinder
A structural frame consisting of 2 spun steel rings and 2 formed steel channels support a 20 gauge steel cylinder phosphate coated for corrosion resistance, and finished in red polyester powder coat paint. The heating cylinder pivots vertically to direct air flow.

Leg Assembly
Each side consists of a one piece, 12 gauge, formed steel member, which accepts a steel tubular handle, held in place with a 1-1/2" long x 1/4" bolt on each side. The handle can be raised from the shipping position if desired. The rubber, pneumatic wheels are 10" diameter and 3 1/2" wide to provide ease of transporting the heater on irregular and gravel surfaces. The large wheels make it easy to roll up stairways without damage to decorative step surfaces.

Fan Assembly
The self-centering fan assembly consists of a totally enclosed, permanently lubricated motor and a dynamically balanced aluminum fan blade for smooth, quiet operation.

Controls
A thermostat, with a temperature range of 40°F to 100°F is included, with a full off position, a fan only position and an adjustable range of temperature settings in the heating mode position. Each unit includes a 3 pole magnetic contactor and auto-reset thermal cutout. 480 volt and 600 volt units also include a motor relay and 120 volt control voltage transformer for personnel safety.

Safety Guards

Front and rear grills are 10 gauge, finished in black polyester powder coat and are designed to meet OSHA safety requirements.

Heating Assembly
The patented metal sheath Fintube® heating elements consist of steel fins furnace brazed on industrial grade .475 diameter steel sheath tubular heaters for maximum heat transfer. The elements are held in place with steel bulkhead fittings for durability. The elements feature a high temperature finish for corrosive protection.

Applications

- For Best Results Use in Enclosed Area with Ceiling Heights Below 15'
- Warming Workers
- Thawing Frozen Pipes
- Thawing Railroad Cars
- Heating Large Tents
- Non-Hazardous Areas

DRA
Portable Spot Industrial Salamander Blower Heater *(cont'd.)*

Specifications and Ordering Information

kW	Volts	Phase	Amps[1]	BTU/H	HP	CFM	Temp. Rise °F[2]	Model	Stock	PCN	Wt. (Lbs.)
7.5	208	1 and 3	36.3/21.0	25,590	0.06	1070	23	DRA-07-83	NS	295523	65
7.5/5.6	240/208	1 and 3	31.5/18.3[3]	25,590	0.06	1070	23	**DRA-07-23**	**S**	**295531**	65
9.75	208	1 and 3	47.1/27.3	33,267	0.06	1070	31	**DRA-10-83**	**S**	**295540**	65
10/7.5	240/208	1 and 3	40.8/23.7[3]	33,267	0.06	1070	31	**DRA-10-23**	**S**	**295558**	65
15	208	3	41.8	51,180	0.06	1070	46	DRA-15-83	NS	295566	65
15/11.2	240/208	3	36.3[3]	51,180	0.06	1070	46	**DRA-15-23**	**S**	**295574**	65
15	480	1 and 3	31.4	51,180	0.06	1070	46	**DRA-15-43**	**S**	**295582**	65
15	600	1 and 3	25.2	51,180	0.06	1070	46	DRA-15-93	NS	295596	65
19.5/15	240/208	3	47.1[3]	66,534	0.06	1070	61	DRA-20-23	NS	295603	75
20	480	1 and 3	42.0	68,240	0.06	1070	62	**DRA-20-43**	**S**	**295611**	75
20	600	1 and 3	33.5	68,240	0.06	1070	62	DRA-20-93	NS	295620	75
30	480	3	36.3	102,360	0.06	1070	92	**DRA-30-43**	**S**	**295638**	75
30	600	3	29.1	102,360	0.06	1070	92	DRA-30-93	NS	295646	75

Stock Status: **S** = stock NS = non-stock
To Order—Specify model, PCN, kW, volts, phase and quantity.

1. Includes motor amps
2. Temperature rise at 240V operation
3. 208V amperage is 86% of 240V value

Models designated 1 and 3 can be field converted from three phase to single phase. Consult product installation, operation, and maintenance manual for details.

All models factory pre-wired with an 8 foot cord and plug for use in 3 phase operation (See table 1 factory installed plug and cord information)

Factory Installed Plug and Cord Data

Model	Plug Type	Cable Type	Model	Plug Type	Cable Type
DRA-07-83	NEMA 18-30P, Straight Blade	10 AWG, 4 Wire	DRA-15-93	NEMA 17-30P, Twist-Lock	12 AWG, 4 Wire
DRA-07-23	NEMA 18-30P, Straight Blade	10 AWG, 4 Wire	DRA-20-23	NEMA 15-50P, Straight Blade	4 AWG, 4 Wire
DRA-10-83	NEMA 18-30P, Straight Blade	8 AWG, 4 Wire	DRA-20-43	NEMA 16-30P, Twist-Lock	8 AWG, 4 Wire
DRA-10-23	NEMA 18-30P, Straight Blade	8 AWG, 4 Wire	DRA-20-93	NEMA 17-30P, Twist-Lock	10 AWG, 4 Wire
DRA-15-83	NEMA 18-50P, Straight Blade	6 AWG, 4 Wire	DRA-30-43	Non-NEMA 50A, Twist-Lock	6 AWG, 4 Wire
DRA-15-23	NEMA 15-50P, Straight Blade	6 AWG, 4 Wire	DRA-30-93	Non-NEMA 50A, Twist-Lock	8 AWG, 4 Wire
DRA-15-43	NEMA 16-30P, Twist-Lock	10 AWG, 4 Wire			

Standard Locking Plugs

Plug Type	Catalog Number	Description	Volts	Amps	NEMA#	Fits Cable Dia. (In.)	Stock	PCN	Wt. (Lbs.)
LOCKING	PGL-15-20	3 Pole, 4 Wire	250	20	L15-20	.385 to .780	NS	338845 / 511556014	0.5
LOCKING	PGL-16-30	3 Pole, 4 Wire	480	30	L16-30	.595 to 1.150	NS	338861 / 511556023	0.5
LOCKING	PGL-17-30	3 Pole, 4 Wire	600	30	L17-30	.595 to 1.150	**S**	**338870 / 511556032**	0.5
LOCKING	PGL-3763C	2 Pole, 3 Wire	600	50	N/A	.750 to 1.125	NS	338917 / 511556033	0.5
LOCKING	PGL-3765C	3 Pole, 4 Wire	600	50	N/A	.750 to 1.125	NS	338925 / 511556034	0.5
NON LOCKING	PGN-6-50	2 Pole, 3 Wire	250	50	6-50	.625 to 1.187	**S**	**338888 / 511506014**	0.5
NON LOCKING	PGN-15-20	3 Pole, 4 Wire	250	20	15-20	.390 to .775	**S**	**338896 / 511506006**	0.5
NON LOCKING	PGN-18-30	4 Pole, 4 Wire	208	30	18-30	.625 to 1.310	NS	511506026	0.5
NON LOCKING	PGN-18-50	4 Pole, 4 Wire	208	30	18-50	.625 to 1.310	NS	511506024	0.5
LOCKING	PGL-8165C	3 Pole, 4 Wire	480	50	N/A	.92 to 1.2	NS	511556031	0.5
NON LOCKING	PGN-8461C	3 Pole, 4 Wire	250	60	N/A	.625 to 1.310	NS	511506028	0.5

Stock Status: **S** = stock NS = non-stock
To Order—Specify model, PCN, kW, volts, phase and quantity.