CHROMALOX

ADH & ADHT

High Temperature Air Duct Heaters

- 5 - 300 kW
- 240 and 480 Volt, Three Phase (Up to 600V Available)
- INCOLOY® Sheath Elements
- 800°F Max. Outlet Air Temp. (ADH)
- 1200°F Max. Outlet Air Temp. (ADHT)

Applications

- Heat Air for Drying and Curing operations up to 1200°F Air Temperature
- Heat Treating
- Reheating or Dehumidification
- Aircraft Manufacturing
- Autoclaves
- Annealing
- Drying
- Paint Baking or Drying
- Sterilizing

Features

Long Life Metal Sheath Tubular Elements — High grade INCOLOY ® sheath material for excellent corrosion/oxidation resistance at high operating temperatures.

Sturdy Metal Sheath Elements minimize problems associated with open coil resistance wire units.

High Purity Magnesium Oxide — The elements are filled with highest purity blends of magnesium oxide refractory (MgO) compacted to a rock hard density to ensure good thermal conductivity and electrical insulation resistance.

Superior Grade Resistance Wire — The heart of each heating element is made of high quality resistance wire for maximum life.

Low Watt Density Resistor Wire — Watt density on the heating coil is designed for low watt density operation by increasing the coil and wire diameter, and length of resistance wire to give maximum surface area and low operating coil surface temperature — providing longer coil life.

Superior Construction at Element Bends — All element bends are repressed in hydraulic presses after bending to assure recompaction of refractory material to eliminate hot spots and electrical insulation voids.

ADH – Typical Installation

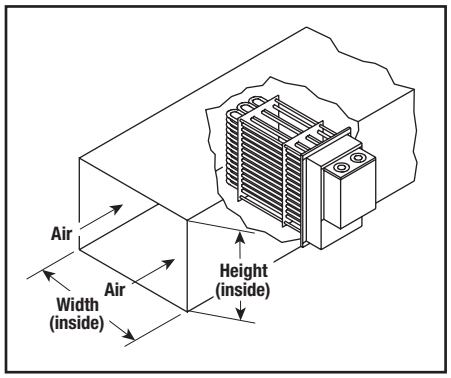

ADHT – Typical Installation

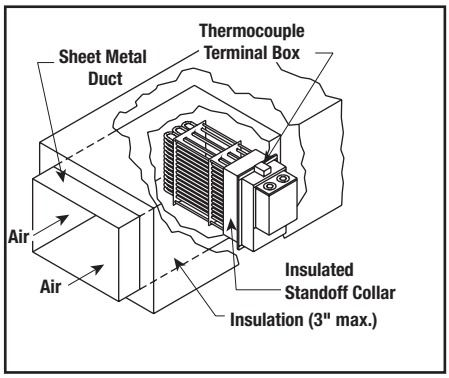

Low Wiring Compartment Temperatures — Made possible by the addition of a one inch thick blanket of insulation in the terminal box. High temperature ADHT units include an additional three inches of insulation to help reduce duct heat losses.

Meets NEC Wiring Requirements — Heaters are subdivided into 48 Amp maximum circuits in compliance with the National Electrical Code.

Easy Access to Field Wiring Terminals — Terminal housing is completely removable for maximum access to field wiring terminals. Individual terminal blocks with threaded stud type terminals are provided for each circuit to permit quick positive attachment of circuit wiring conductors.

Dirt & Dust Resistant Terminal Housing — Made of solid heavy gauge aluminized steel, rather than perforated metal, to resist dirt and dust accumulation on the electrical connections and thus provide longer service life.

Flange Mounting Gasket — Packed separately with each duct heater to minimize air leakage between the flange and air duct.

Tandem Mounting — Multiple heaters may be mounted in tandem with each other provided the maximum recommended outlet air temperature is not exceeded.

Element Support Plate — A stainless steel element support plate is held in place with Stainless Steel support rods to provide structural stability.

Pressure Drop — See Pressure Drop Curve G-227-2 under Air & Gas Data in the Technical section of this catalog.

Options

Gas Tight Design — Threaded fittings with fiber washers attach heating elements to flange — prevents leakage of ducted air into terminal housing.

Overtemperature Protection — Thermocouple welded to the element sheath surface and wired to a terminal block allows for accurate overheat protection. Standard Type K thermocouple on ADHT high temperature heaters.

Thermocouple Sensor for air temperature control.

Moisture or Explosion-Resistant Terminal Enclosures are available for those applications requiring special terminal protection. Explosion-Resistant enclosure design meets requirements for Class I, Div.2, Group D area but does not carry any third party listing .

CAUTION — If atmosphere in duct contains combustible gases or vapors, sheath temperatures must be limited not to exceed 80% of the ignition temperature of the gas or the vapor involved. Check with your Local Chromalox Sales office for recommendations.

Special Ratings, Sizes or Construction Materials — Chromalox can fabricate a duct heater to your special rating, physical size or other specifications.

Application Assistance — Chromalox will assist you in the design or selection of equipment. Contact your Local Chromalox Sales office.

ADH & ADHT

High Temperature Air Duct Heaters *(cont'd.)*

ADH - Dimensions (Inches) (See Dimensional Table)

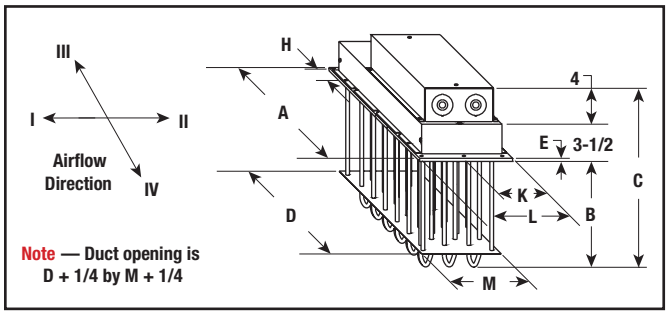

ADHT - Dimensions (Inches) (See Dimensional Table)

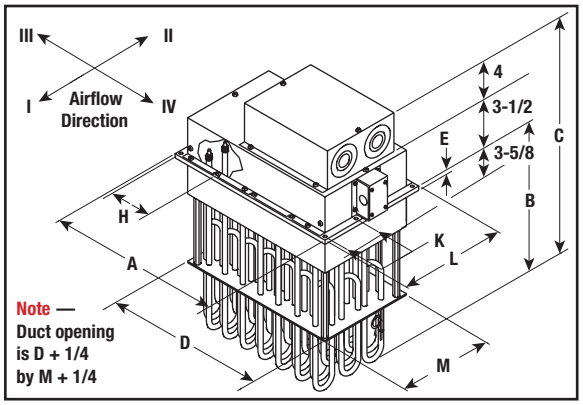

Dimensional Table ADH / ADHT

Cat. No.	Cat. No.	kW	No. Elem.	Dimensions (In.) A	B	C	D	E	H	K	L	M
ADH-005	ADHT-005	5	3	5-5/8	20-3/8	28-1/8	4	1/4	2-1/2	3-1/2	11-1/8	9-1/2
ADH-010	ADHT-010	10	6	7-5/8	20-3/8	28-1/8	6	1/4	3-1/2	3-1/2	11-1/8	9-1/2
ADH-015	ADHT-015	15	9	9-5/8	20-3/8	28-1/8	8	1/4	3	3-1/2	11-1/8	9-1/2
ADH-020	ADHT-020	20	12	11-5/8	20-3/8	28-1/8	10	1/4	2-3/4	3-1/2	11-1/8	9-1/2
ADH-025	ADHT-025	25	15	13-5/8	20-3/8	28-1/8	12	1/4	3-1/4	3-1/2	11-1/8	9-1/2
ADH-030	ADHT-030	30	18	15-5/8	20-3/8	28-1/4	14	3/8	3-3/4	3-1/2	11-1/8	9-1/2
ADH-035	ADHT-035	35	21	17-5/8	20-3/8	28-1/4	16	3/8	4-1/4	3-1/2	11-1/8	9-1/2
ADH-040	ADHT-040	40	24	19-5/8	20-3/8	28-1/4	18	3/8	4-3/4	3-1/2	11-1/8	9-1/2
ADH-045	ADHT-045	45	27	21-5/8	20-3/8	28-1/4	20	3/8	5-1/4	3-1/2	11-1/8	9-1/2
ADH-050	ADHT-050	50	30	23-5/8	20-3/8	28-1/4	22	3/8	5-3/4	3-1/2	11-1/8	9-1/2
ADH-060	ADHT-060	60	36	27-5/8	20-3/8	28-1/4	26	3/8	4-1/2	3-1/2	11-1/8	9-1/2
ADH-070	ADHT-070	70	42	31-5/8	20-1/8	28-1/4	30	3/8	3-7/8	3-1/2	11-1/8	9-1/2
ADH-080	ADHT-080	80	48	35-5/8	20-3/8	28-1/4	34	3/8	4-3/8	3-1/2	11-1/8	9-1/2
ADH-090	ADHT-090	90	54	39-5/8	20-3/8	28-1/4	38	3/8	4-7/8	3-1/2	11-1/8	9-1/2
ADH-100	ADHT-100	100	60	43-5/8	20-3/8	28-1/4	42	3/8	5-3/8	3-1/2	11-1/8	9-1/2
–	ADHT-120	120	48	35-5/8	35	42-7/8	26	3/8	4-1/2	3-1/2	11-1/8	9-1/2
ADH-126	–	126	42	31-5/8	35	42-7/8	30	3/8	3-7/8	3-1/2	11-1/8	9-1/2
ADH-144	–	144	48	35-5/8	35	42-7/8	34	3/8	4-3/8	3-1/2	11-1/8	9-1/2
–	ADHT-160	160	48	35-5/8	35	42-7/8	34	3/8	4-3/8	3-1/2	11-1/8	9-1/2
ADH-162	–	162	54	39-5/8	35	42-7/8	38	3/8	4-7/8	3-1/2	11-1/8	9-1/2
–	ADHT-180	180	54	39-5/8	35	42-7/8	38	3/8	4-7/8	3-1/2	11-1/8	9-1/2
ADH-216	–	216	72	27-5/8	35	42-7/8	26	3/8	4-1/2	3-7/8	20	18-3/8
–	ADHT-240	240	72	27-5/8	35	42-7/8	26	3/8	4-1/2	3-7/8	20	18-3/8
ADH-270	–	270	90	33-5/8	35	42-7/8	32	3/8	5-1/2	3-7/8	20	18-3/8
–	ADHT-300	300	90	33-5/8	35	42-7/8	32	3/8	5-1/2	3-7/8	20	18-3/8

All Heaters can be mounted in any position; top, side or bottom entry. In high ambient temperature operations, least corrosive action and least oxidation to the terminals will occur if heaters are mounted with terminals in the coolest possible ambient, usually on bottom or side of duct. Mimumum duct size is A or L dimensio n plus 3/8" and B dimension plus 1-5/8", and 3" for insulation housing.

For selecting the proper control panel for use with the ADH and ADHT duct heaters, the number of cir - cuits is of crucial importance. The Electrical table, at right, should be used for the purpose of determining the number of circuits in the panel.

Field Wiring — Refer to Graph ADHTB Terminal Box Temperature field wiring selection guide in the technical section of this catalog (Section I).

Gas tight construction should be considered if the gas pressure in the duct is at a higher relative pres - sure than in the terminal box which is at room air pressure. Refer to ADH/ADHT terminal box tempera - ture and field wiring selection guide showing the temperature in the terminal box at various gas outlet temperatures. This guide is graph ADHTB located in the Air and Gas Heating section in the technical pages in the back of the catalog.

Electrical Table for ADH and ADHT Duct heaters

KW	No. Elements	Number of Circuits 240V 1Ph	240V 3 Ph	480V 1 Ph	480V 3 Ph
5	3	1	1	1	1
10	6	1	1	1	1
15	9	3	1	1	1
20	12	2	2	1	1
25	15	3	2	2	1
30	18	3	2	3	1
35	21	X	3	2	1
40	24	X	3	2	2
45	27	X	3	3	2
50	30	X	5	3	2
60	36	X	X	X	2
70	42	X	X	X	4
80	48	X	X	X	4
90	54	X	X	X	5
100	60	X	X	X	5
120	36	X	X	X	4
126	42	X	X	X	4
144	48	X	X	X	4
160	48	X	X	X	8
162	54	X	X	X	6
180	54	X	X	X	6
216	72	X	X	X	6
240	72	X	X	X	8
270	90	X	X	X	8
300	90	X	X	X	10

All standard circuits are maximum of 48 Amps
For other # of circuits/amps per circuit consult factory
X denotes not standard

ADH
High Temperature Air Duct Heaters

- 5 - 270 kW
- 240 and 480 Volt, Three Phase (Up to 600V Available)
- INCOLOY® Sheath Elements
- 30 W/In²
- 800°F Max. Outlet Air Temp.

Construction

Rugged Construction Elements — Sturdy 0.475" diameter INCOLOY ® sheath tubular elements are mounted to a heavy 1/4 or 3/8" thick steel flange. Element fasteners allow for easy replacement.

Corrosion-Resistant Terminal Enclosure — The element terminal enclosure is made of 16 gauge high-temperature, corrosion-resistant steel and includes 1" thick high-temperature insulation to minimize temperatures in the wiring area.

Wiring Box — The 16 gauge wiring box encloses individual terminal blocks for each circuit. Threaded stud type terminals are provided to permit quick positive attachment of circuit wiring conductors.

Mounting

All Heaters can be mounted in any position; top, side or bottom entry. In high ambient temperature operations, least corrosive action and least oxidation to the terminals will occur if heaters are mounted with terminals in the coolest possible ambient, usually on bottom or side of duct. Minimum duct size is A or L dimension plus 3/8" and B dimension plus 1-5/8".

Application & Selection Guidelines

Maximum Work Temperatures — Type ADH heaters can generally be used at the following maximum temperatures, provided the minimum air velocity is maintained uniformly through the heater.

Air Velocity (Ft./Sec.)	Max. Outlet Air Temp. (°F)
4 - 36	800

Note — Maximum temperatures are based on 30 W/In ². If elements have a lower watt density, work temperature may be increased; if watt density is higher, work temperature should be lower.

Note — An airflow type switch or other device is recommended to protect against loss of airflow.

Note — See Allowable Watt Density & Heater Selection Graphs in the Technical section of this catalog.

Basic Model			Includes Thermocouple		Includes Gas Tight Fittings		Includes Thermocouple & Ftgs.		Wt.
Volts KW Phase	Model	PCN	Model	PCN	Model	PCN	Model	PCN	(Lbs.)
240V 5KW 1PH	ADH-005	210673	ADH-005T	214770	ADH-005F	215212	ADH-005FT	215634	15
240V 5KW 3PH	ADH-005	210681	ADH-005T	214789	ADH-005F	215220	ADH-005FT	215642	15
480V 5KW 1PH	ADH-005	210690	ADH-005T	214797	ADH-005F	215239	ADH-005FT	215650	15
480V 5KW 3PH	ADH-005	210016	ADH-005T	214800	ADH-005F	215247	ADH-005FT	215669	15
240V 10KW 1PH	ADH-010	210702	ADH-010T	214818	ADH-010F	215255	ADH-010FT	215677	20
240V 10KW 3PH	ADH-010	210710	ADH-010T	214826	ADH-010F	215263	ADH-010FT	215685	20
480V 10KW 1PH	ADH-010	210729	ADH-010T	214834	ADH-010F	215271	ADH-010FT	215693	20
480V 10KW 3PH	**ADH-010**	**210024**	ADH-010T	214842	ADH-010F	215280	ADH-010FT	215706	20
240V 15KW 1PH	ADH-015	210737	ADH-015T	214850	ADH-015F	215298	ADH-015FT	215714	25
240V 15KW 3PH	ADH-015	210745	ADH-015T	214869	ADH-015F	215300	ADH-015FT	215722	25
480V 15KW 1PH	ADH-015	210753	ADH-015T	214877	ADH-015F	215319	ADH-015FT	215730	25
480V 15KW 3PH	**ADH-015**	**210032**	ADH-015T	214885	ADH-015F	215327	ADH-015FT	215749	25
240V 20KW 1PH	ADH-020	210761	ADH-020T	214893	ADH-020F	215335	ADH-020FT	215757	35
240V 20KW 3PH	ADH-020	210788	ADH-020T	214906	ADH-020F	215343	ADH-020FT	215765	35
480V 20KW 1PH	ADH-020	210796	ADH-020T	214914	ADH-020F	215351	ADH-020FT	215773	35
480V 20KW 3PH	**ADH-020**	**210040**	ADH-020T	214922	ADH-020F	215360	ADH-020FT	215781	35
240V 25KW 1PH	**ADH-025**	**210809**	ADH-025T	214930	ADH-025F	215378	ADH-025FT	215790	40
240V 25KW 3PH	ADH-025	210817	ADH-025T	214949	ADH-025F	215386	ADH-025FT	215802	40
480V 25KW 1PH	ADH-025	210825	ADH-025T	214957	ADH-025F	215394	ADH-025FT	215810	40
480V 25KW 3PH	ADH-025	210059	ADH-025T	214965	ADH-025F	215407	ADH-025FT	215829	40
240V 30KW 1PH	ADH-030	210833	ADH-030T	214973	ADH-030F	215415	ADH-030FT	215837	55
240V 30KW 3PH	ADH-030	210841	ADH-030T	214981	ADH-030F	215423	ADH-030FT	215845	55
480V 30KW 1PH	ADH-030	210850	ADH-030T	214990	ADH-030F	215431	ADH-030FT	215855	55
480V 30KW 3PH	ADH-030	210067	ADH-030T	215001	ADH-030F	215440	ADH-030FT	215861	5S
240V 35KW 3PH	ADH-035	210868	ADH-035T	215036	ADH-035F	215458	ADH-035FT	215870	65
480V 35KW 1PH	ADH-035	210876	ADH-035T	215044	ADH-035F	215466	ADH-035FT	215888	50
480V 35KW 3PH	ADH-035	210075	ADH-035T	215052	ADH-035F	215474	ADH-035FT	215896	65
240V 40KW 3PH	ADH-040	210884	ADH-040T	215060	ADH-040F	215482	ADH-040FT	215909	70
480V 40KW 1PH	ADH-040	210892	ADH-040T	215079	ADH-040F	215490	ADH-040FT	215917	70
480V 40KW 3PH	ADH-040	210083	ADH-040T	215087	ADH-040F	215503	ADH-040FT	215925	70
240V 45KW 3PH	ADH-045	210905	ADH-045T	215095	ADH-045F	215511	ADH-045FT	215933	80
480V 45KW 1PH	ADH-045	210913	ADH-045T	215108	ADH-045F	215520	ADH-045FT	215941	80
480V 45KW 3PH	ADH-045	210091	ADH-045T	215116	ADH-045F	215538	ADH-045FT	215950	80
240V 50KW 3PH	ADH-050	210921	ADH-050T	215124	ADH-050F	215546	ADH-050FT	215968	90
480V 50KW 1PH	ADH-050	210930	ADH-050T	215132	ADH-050F	215554	ADH-050FT	215976	90
480V 50KW 3PH	ADH-050	210104	ADH-050T	215140	ADH-050F	215562	ADH-050FT	215984	90
480V 60KW 3PH	ADH-060	210112	ADH-060T	215159	ADH-060F	215570	ADH-060FT	215992	105
480V 70KW 3PH	ADH-070	210948	ADH-070T	215167	ADH-070F	215589	ADH-070FT	216004	140
480V 80KW 3PH	ADH-080	210120	ADH-080T	215175	ADH-080F	215597	ADH-080FT	216100	140
480V 90KW 3PH	ADH-090	210139	ADH-090T	215183	ADH-090F	215600	ADH-090FT	216119	160
480V 100KW 3PH	ADH-100	210147	ADH-100T	215191	ADH-100F	215618	ADH-100FT	216127	165
480V 126KW 3PH	ADH-126	210956	ADH-126T	215204	ADH-126F	215626	ADH-126FT	216135	165
480V 144KW 3PH	ADH-144	210155	ADH-144T	216936	ADH-144F	216952	ADH-144FT	216143	185
480V 162KW 3PH	ADH-162	210163	ADH-162T	216944	ADH-162F	216960	ADH-162FT	216151	240
480V 216KW 3PH					ADH-216F	210171	ADH-216FT	216928	300
480V 270KW 3PH					ADH-270F	210180	ADH-270FT	216160	300

Stock Status: 210024, 210032, 210040, and 210809 are stocked product
To Order— Specify model, PCN, kW and quantity.

ADHT
High Temperature Air Duct Heater

- 5 - 300 kW
- 240 and 480 Volt, Three Phase (Up to 600V Available)
- INCOLOY® Sheath Elements
- 20 W/In²
- 1200°F Max. Outlet Air Temp.
- Insulated Standoff Collar

Type ADHT

Construction

Rugged Construction Elements — Sturdy 0.475" diameter INCOLOY ® sheath tubular elements are mounted to a heavy 1/4 or 3/8" thick steel flange. Element fasteners to allow for easy replacement.

Corrosion-Resistant Terminal Enclosure — The element terminal enclosure is made of 16 gauge high-temperature, corrosion-resistant steel and includes 1" thick high-temperature insulation to minimize temperatures in the wiring area.

Wiring Box — The 16 gauge wiring box encloses individual terminal blocks for each circuit. Threaded stud type terminals are provided to permit quick positive attachment of circuit wiring conductors.

Insulation Housing — Includes 3" of high temperature thermal insulation to reduce duct heat conducted into terminal enclosure.

Overtemperature Protection — A type K thermocouple is welded to the element sheath surface to sense element temperature, and is wired to a terminal block located on the outer surface of the terminal housing.

Mounting

Generally mounted to a field fabricated stand off collar from the ductwork to position the heater such that the 3" insulation housing is in the same plane as the duct insulation.

All Heaters can be mounted in any position; top, side or bottom entry. In high ambient temperature operations, least corrosive action and least oxidation to the terminals will occur if heaters are mounted with terminals in the coolest possible ambient, usually on bottom or side of duct. Minimum duct size is A or L dimension plus 3/8" and B dimension plus 1-5/8", and 3" for insulation housing.

Application & Selection Guidelines

Maximum Work Temperatures — Type ADHT heaters can generally be used at the following maximum temperatures, provided the minimum air velocity is maintained uniformly through the heater. Maximum temperatures are based on 20 W/In ².

Air Velocity (Ft./Sec.)	Max. Outlet Air Temp. (°F)
4	1050
9	1100
16	1150
25	1200
36	1200

Note — See Allowable Watt Density & Heater Selection Graphs in Technical section.

Note — An airflow type switch or other device is recommended to protect against loss of airflow.

Basic Model			Includes Gas Tight Fittings		Wt.
Volts KW Phase	Model	PCN	Model	PCN	(Lbs.)
240V 5KW 1PH	ADHT-005	216178	ADHT-005F	216450	15
240V 5KW 3PH	ADHT-005	216186	ADHT-005F	216469	15
480V 5KW 1PH	ADHT-005	216194	ADHT-005F	216477	15
480V 5KW 3PH	ADHT-005	210198	ADHT-005F	216485	15
240V 10KW 1PH	ADHT-010	216215	ADHT-010F	216493	20
240V 10KW 3PH	ADHT-010	216223	ADHT-010F	216506	20
480V 10KW 1PH	ADHT-010	216231	ADHT-010F	216549	20
480V 10KW 3PH	ADHT-010	210200	ADHT-010F	216557	20
240V 15KW 1PH	ADHT-015	216248	ADHT-015F	216565	25
240V 15KW 3PH	ADHT-015	216258	ADHT-015F	216573	25
480V 15KW 1PH	ADHT-015	216266	ADHT-015F	216581	25
480V 15KW 3PH	ADHT-015	210219	ADHT-015F	216590	25
240V 20KW 1PH	ADHT-020	216274	ADHT-020F	216602	40
240V 20KW 3PH	ADHT-020	216282	ADHT-020F	216610	40
480V 20KW 1PH	ADHT-020	216290	ADHT-020F	216629	40
480V 20KW 3PH	ADHT-020	210227	ADHT-020F	216637	40
240V 25KW 1PH	ADHT-025	216303	ADHT-025F	216645	55
240V 25KW 3PH	ADHT-025	216311	ADHT-025F	216653	55
480V 25KW 1PH	ADHT-025	216320	ADHT-025F	216661	55
480V 25KW 3PH	ADHT-025	210235	ADHT-025F	216670	55
240V 30KW 1PH	ADHT-030	216338	ADHT-030F	216688	65
240V 30KW 3PH	ADHT-030	216346	ADHT-030F	216696	65
480V 30KW 1PH	ADHT-030	216354	ADHT-030F	216709	65
480V 30KW 3PH	ADHT-030	210243	ADHT-030F	216717	65
240V 35KW 3PH	ADHT-035	216362	ADHT-035F	216725	65
480V 35KW 1PH	ADHT-035	216370	ADHT-035F	216733	65
480V 35KW 3PH	ADHT-035	210251	ADHT-035F	216741	65
240V 40KW 3PH	ADHT-040	216389	ADHT-040F	216750	70
480V 40KW 1PH	ADHT-040	216397	ADHT-040F	216768	70
480V 40KW 3PH	ADHT-040	210260	ADHT-040F	216776	70
240V 45KW 3PH	ADHT-045	216408	ADHT-045F	216784	80
480V 45KW 1PH	ADHT-045	216418	ADHT-045F	216792	80
480V 45KW 3PH	ADHT-045	210278	ADHT-045F	216805	80
240V 50KW 3PH	ADHT-050	216426	ADHT-050F	216813	90
480V 50KW 1PH	ADHT-050	216434	ADHT-050F	216821	90
480V 50KW 3PH	ADHT-050	210286	ADHT-050F	216830	90
480V 60KW 2-3PH	ADHT-060	210294	ADHT-060F	216848	105
480V 70KW 3PH	ADHT-070	216442	ADHT-070F	216856	140
480V 80KW 3PH	ADHT-080	210307	ADHT-080F	216864	140
480V 90KW 3PH	ADHT-090	210315	ADHT-090F	216872	160
480V 100KW 3PH	ADHT-100	210323	ADHT-100F	216880	165
480V 120KW 3PH	ADHT-120	210331	ADHT-120F	216899	165
480V 160KW 3PH	ADHT-160	210340	ADHT-160F	216901	200
480V 180KW 3PH	ADHT-180	210358	ADHT-180F	216910	200
480V 240KW 3PH			ADHT-240F	210366	400
480V 300KW 3PH			ADHT-300F	210374	500

To Order—Specify model, PCN, kW and quantity.