4001 Chromalox®

DIN Rail Mount Single Phase
Zero-Crossover Fired SCR/Triac
Power Controller

Sept. 1999
0037-75381

User Instructions

Description

The Chromalox 4001 Power Controllers are single phase, zero-crossover fired and include models that are 12 to 80 Amps, 120 to 600 Vac. These power controllers are designed to install easily onto a standard DIN rail or to be surface mounted on the back plane of an enclosure. A "ON" green LED indicates when the switch is closed (the heater is on).

The 4001 has a low current Triac version (12 or 18 Amps at up to 240 Vac) and a high current SCR version (up to 80 Amps at 600 Vac).

There are four inputs available, 4.5 to 35 Vdc, 4-20 mA, 100-240 Vac, and 24 Vac.

The Thermal Protection option provides SCR protection and indication. When the heat sink temperature exceeds 80˚C, the control signal is turned off and the OH (Over Heat) indication turns on. When the heatsink cools, the 4001 output turns back on.

Model Identification

On receiving your 4001 unit, verify the model number on the unit using the following tables.

4001 Triac Model Identification

Model	Solid State Power Controller
4001 Triac	Single Phase, Zero Crossover Fired Solid State Relay, DIN-Rail or Sub-Panel Mount

Code	Max. Rated Current @ 50˚C (Amps)
12	12 Amps
18	18 Amps

Code	Voltage	PIV (Peak Inverse Voltage)
3	Up to 240 Vac	800

Code	Input
7	4.5 - 32 Vdc

Code	
0	Add to complete Model Number

4001 - 12 3 7 0 Typical Model No.

4001 SCR Model Identification

Model	Solid State Power Controller
4001 SCR	Single Phase, Zero Crossover Fired Solid State Relay, DIN-Rail or Sub-Panel Mount

Code	Max. Rated Current @ 50˚C (Amps)
35	35 Amps
45	45 Amps
60	60 Amps
80	80 Amps

Code	Voltage	PIV (Peak Inverse Voltage)
3	Up to 400 Vac	1200
6	Up to 600 Vac	1600

Code	Input
1	100 to 240 Vac
2	24 Vac
4	4-20 mA (300Ω Input Impedance)
7	4.5 - 32 Vdc

Code	Heatsink Thermostat
0	None
1	Heatsink Thermostat for Thermal Protection*

4001 - 35 3 4 1 Typical Model No.

*Heatsink Thermostat not available on Vac Input Codes 1 & 2

Input Switching Mode 4-20 mA

The 4-20 mA control signal for the 4001 SCR units can be jumpered to switch the SCR's in a single cycle mode and burst firing modes. The single cycle mode distributes the switching by the smallest numbers of cycles (60 Hz power has 60 cycles/ second). At 50% power (12 mA in) the SCR's will switch one cycle on, and one cycle off. At 75% power the SCR's will switch 3 cycles on, 1 cycle off.

The fast cycle, has a cycle time of 100 cycles (1 2/3 seconds on a 60 Hz system) and divides the time on by the percent power, i.e. at 12 mA, 50% power it is on 50 cycles (5/6 seconds) and off 50 cycles (5/6 seconds).

To select which switching mode:

1. Remove plastic cover to expose the circuit board.
   Remove and discard cardboard packing strips.

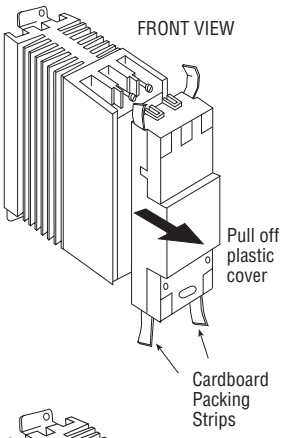

2. Locate the 4 jumper pins and black jumper.

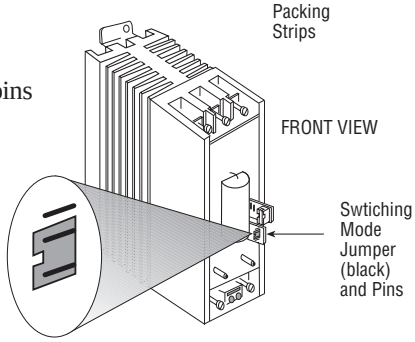

3. Place jumper in position to select desired switching mode (fast, slow, or single cycle).

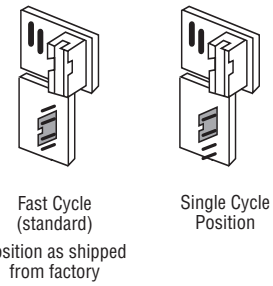

4. Replace the plastic cover on the device and push it unitl a "click" is heard.

Installation Notes and Warnings

1. Qualified personnel must do installation, wiring and maintenance.
2. Wiring must conform to National Electric Code (NEC) safety standards, as well as local codes.
3. A circuit breaker or fused disconnect is needed to protect all "hot" phases, the wiring and the load (heater). Before working on the system, open the disconnect or circuit breaker.
4. A shut down contactor should be used with a high limit controller to protect the heaters/process if an overtemperature condition occurs due to shorted SCR, or shorted thermocouple.
5. I^2T fusing is used to protect only the SCR. It will not protect the wiring or the heater.
6. The heatsink, during continuous operation can reach temperatures higher than 180˚F. Use caution to avoid burns.

Input Wiring 4-20 mA

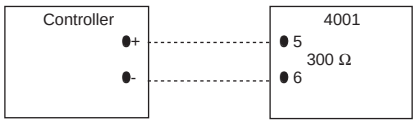

Controller driving a single 4001 must be able to drive 300Ω.

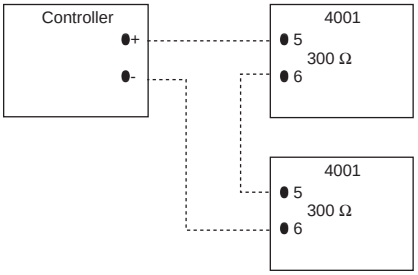

Controller driving two 4001 modules must be able to drive 600Ω.

Input Wiring 100 - 124 Vac (or 24 Vac)

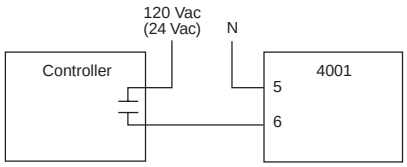

Typical application for 100 to 240 Vac input unit.

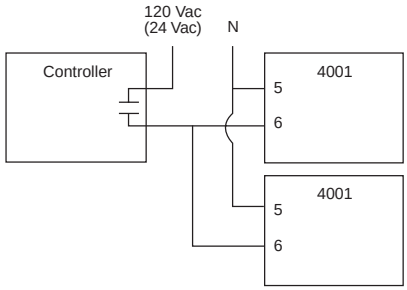

Typical application for controller driving two 4001s

Input Wiring 4.5 - 35 Vdc

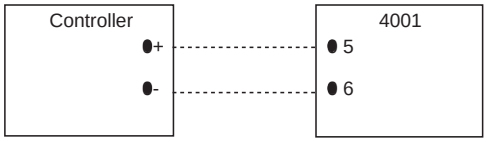

Controller driving a single 4001 must be able to drive a constant current of 15 mA.

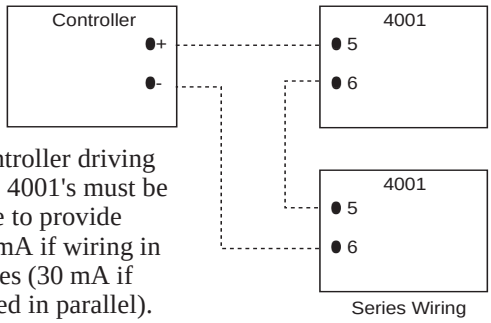

Controller driving two 4001's must be able to provide 15 mA if wiring in series (30 mA if wired in parallel).

Single Phase Wiring

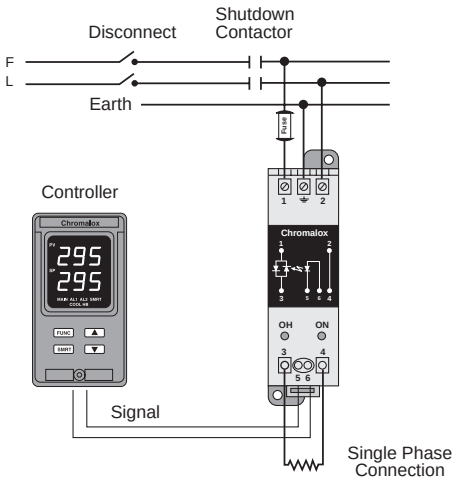

Three Phase, 2-Leg Wiring

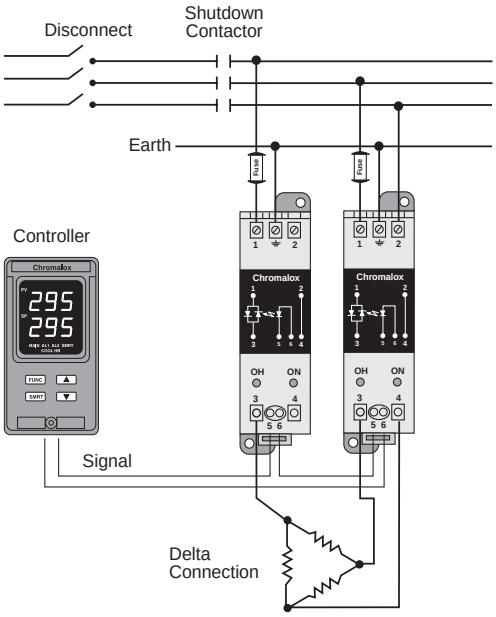

Dimensions

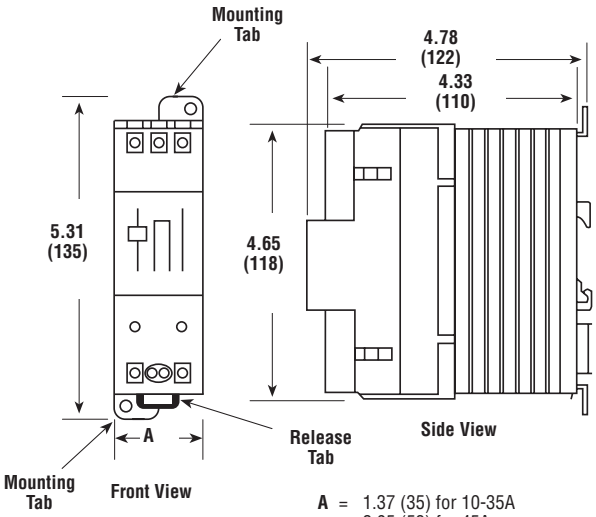

A = 1.37 (35) for 10-35A
= 2.05 (53) for 45A
= 2.73 (70) for 60A
= 5.31 (35) for 80A

All Dimensions in Inches (mm)

Mounting

Spacing

To provide sufficient heat dissipation for the 4001, install such that a minimum of 6" clearance above the unit and 4" clearance below the unit is established. 4001's can be placed next to each other (side by side). No special horizontal spacing is required. Since all SCR's and Triac's are self heating, (approximately 1.2 W/Amp), the heat dissipation of the enclosure must be considered.

Wall Mounting

Use the mounting tabs on the top and bottom of the 4001. (see dimensions).

DIN Rail Mounting

Hook back of the 4001 to the top of the DIN Rail, then rotate the unit down, until it catches.

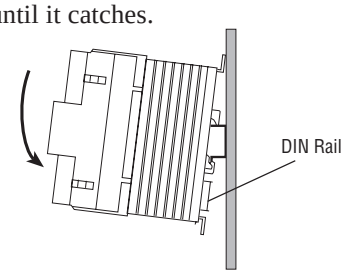

Removing: Place a flat blade screwdriver in the release tab and pull down while rotating the bottom of the unit away from the rail. (see dimensions).

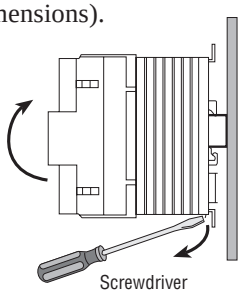

Output Rating Tables

All ratings are convection cooled. Better ratings can be achieved with fan cooling.

4001 12 Amp

Duty Cycle	Ambient Temperature	
	25˚C (77˚F)	50˚C (122˚F)
50%	18 A	16 A
75%	16 A	14 A
100%	14 A	12 A

4001 18 Amp

Duty Cycle	Ambient Temperature	
	25˚C (77˚F)	50˚C (122˚F)
50%	26 A	22 A
75%	24 A	20 A
100%	22 A	18 A

4001 35 Amp

Duty Cycle	Ambient Temperature	
	25˚C (77˚F)	50˚C (122˚F)
50%	55 A	45 A
75%	50 A	40 A
100%	43 A	35 A

4001 45 Amp

Duty Cycle	Ambient Temperature	
	25˚C (77˚F)	50˚C (122˚F)
50%	70 A	60 A
75%	60 A	53 A
100%	53 A	45 A

4001 60 Amp

Duty Cycle	Ambient Temperature	
	25˚C (77˚F)	50˚C (122˚F)
50%	100 A	85 A
75%	85 A	70 A
100%	75 A	60 A

4001 80 Amp

Duty Cycle	Ambient Temperature	
	25˚C (77˚F)	50˚C (122˚F)
50%	125 A	100 A
75%	110 A	90 A
100%	95 A	80 A

Specifications

Firing Type	Zero-crossover
Control Input	Vdc Voltage (15 mA constant current) Off 0-2 Vdc On 4.5 - 35 Vdc 4-20 mA (300Ω) Fast, and Single Cycle
Voltage ac	100-240 Vac Models Off State ..... 0 to 10 Vac On State ..... 100 to 240 Vac (±10%) 24 Vac Models Off State ..... 0 to 4 Vac On State ..... 24 Vac (±15%)
Indicators	OH - Thermal Protection On ON - SCR or Triac On
Output Voltage	Up to 240 Vac (Triac Units) Up to 400 Vac (SCR, Code 3) Up to 600 Vac (SCR, Code 6)
Isolation	3000V rms SCR to ground 7500 V_{PK} Input to Output
Operating Environment	32 to 122˚F (0 to 50˚C), from 0 to 85% Humidity (non-condensing)
Storage Temperature	-4 to 158˚F (-20 to 70˚C)

Limited Warranty:
Please refer to the Chromalox limited warranty applicable to this product at http://www.chromalox.com/customer-service/policies/termsofsale.aspx.

Chromalox®
PRECISION HEAT AND CONTROL
1347 HEIL QUAKER BLVD., LAVERGNE, TN 37086
Phone: (615) 793-3900 www.chromalox.com

P/N 0037-75381
September 2010