Installation and Operation Instructions

STAR Radiant Heater

for Fixed Overhead Installations

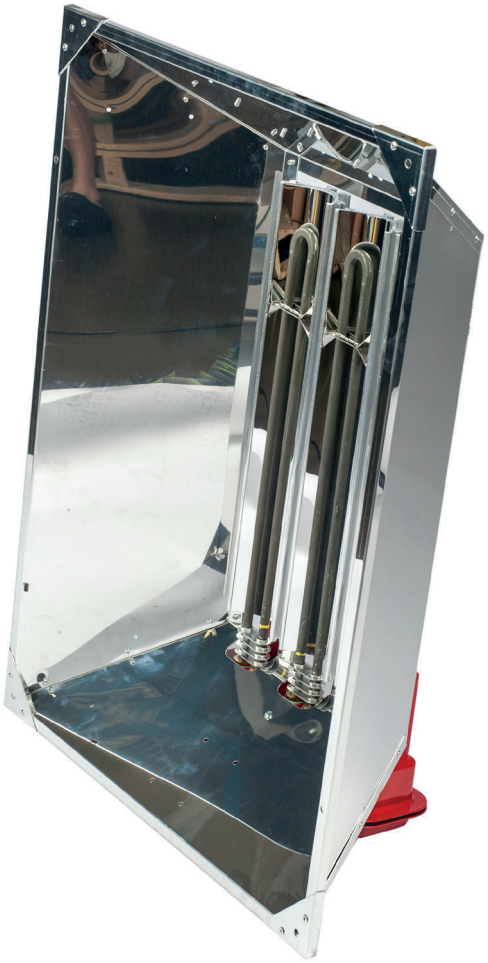

CHROMALOX

PG434-6
161-304901-002
March 2026

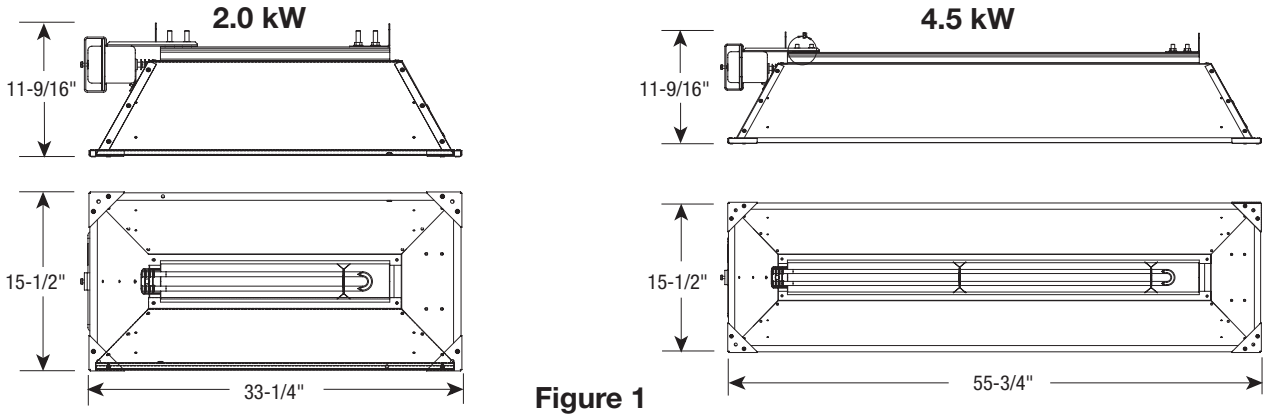

Figure 1

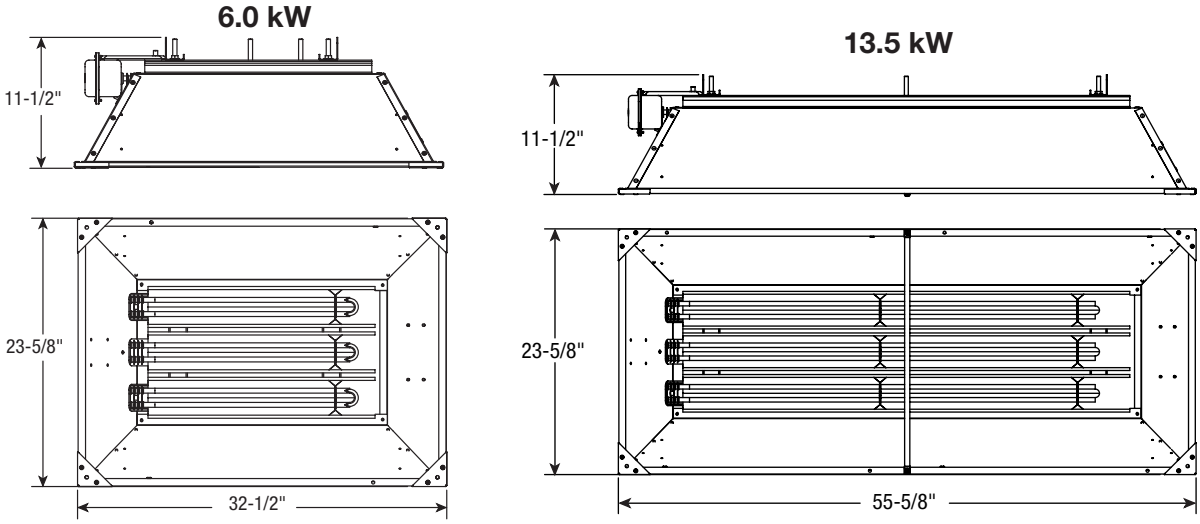

Figure 2

Table 1 - Specifications

Model	Figure	Volts	kW	Amperage		BTU	Dimensions (In.)			Wire Gauge (Min.)	
				1 Phase	3 Phase		A (Length)	B (Width)	D (Depth)	1 Phase	3 Phase
STAR-02A-11-F	1	120	1.5	12.5	NA	5118	33-1/4	15-1/2	11-9/16	14	NA
STAR-02A-81-F		208	2	9.6	NA	6824				14	NA
STAR-02A-21-F		240	2	8.3	NA	6824				14	NA
STAR-02A-71-F		277	2	7.2	NA	6824				14	NA
STAR-02A-41-F		480	2	4.2	NA	6824				14	NA
STAR-02A-61-F*		600	2	3.3	NA	6824				14	NA
STAR-05A-81-F	1	208	4.5	21.6	NA	15354	55-3/4	15-1/2	11-9/16	12	NA
STAR-05A-21-F		240	4.5	18.8	NA	15354				12	NA
STAR-05A-71-F		277	4.5	15.9	NA	15354				14	NA
STAR-05A-41-F		480	4.5	9.4	NA	15354				14	NA
STAR-05A-61-F*		600	4.5	7.5	NA	15354				14	NA
STAR-06A-83-F	2	208	6	28.8	16.7	20472	32-1/2	23-5/8	11-1/2	10	12
STAR-06A-23-F		240	6	25.0	14.4	20472				10	12
STAR-06A-71-F		277	6	21.7	—	20472				10	—
STAR-06A-43-F		480	6	12.5	7.2	20472				12	12
STAR-06A-63-F*		600	6	10.0	5.8	20472				12	12
STAR-14A-83-F	2	208	13.5	NR	37.5	46062	55-5/8	23-5/8	11-3/4	NR	10
STAR-14A-23-F		240	13.5	NR	32.5	46062				NR	10
STAR-14A-71-F		277	13.2	47.7	—	45038				8	—
STAR-14A-43-F		480	13.5	28.1	16.2	46062				12	12
STAR-14A-63-F*		600	13.5	22.5	13.0	46062				12	12

* Not UL or CSA NA - Not Available NR - Not Recommended

STAR Radiant Heater for Fixed Overhead Intallations

IMPORTANT: SAVE THESE INSTRUCTIONS

⚠WARNING

FIRE HAZARD. Do not use as a residential or household heater. Keep combustible material away from heater. Do not operate heater where flammable vapors, gases or liquids are present.

To avoid personal injury read "IMPORTANT INSTRUCTIONS" on this page before installation or operation of heater.

⚠WARNING

ELECTRIC SHOCK AND FIRE HAZARD. This radiant heater is a component of the complete heating system. The heating system designer must consider the risks associated with its operation and specify adequate controls and safety devices. Where the consequences of failure could result in personal injury, property damage or fire, back-up controls are essential.

Installation

The Chromalox STAR radiant heater is shipped fully assembled. The heater can be hung from the ceiling with 4 chains or rigid angle brackets attached to the heater brackets located on the back of the heater, for 2 and 4.5 kW heaters, chains can be attached to the four holes in the corners of the back reflector. (Chromalox offers hanging chain kits for these heaters that will allow for installations 2 to 6 feet from the ceiling.) Minimum spacings:

Ceiling to top of heater is 2 feet.
Wall to sides of heater is 3 feet.
Floor to bottom of heater is 10 feet.

⚠CAUTION

Installer should consult state and local codes and meet any applicable requirements regarding the installation.

⚠WARNING

FIRE HAZARD. Radiant heaters are capable of developing high temperatures, care should be taken to:

A. Mount heater with the proper clearance between heater and walls, ceiling and floor.
B. Mount heater in horizontal position only. Do not mount vertically or tilted in any direction.
C. Do not mount heater over combustible surfaces.
D. Do not stack or store combustible materials directly below the heater or in the space a distance of 5 feet from any projected edge of the heater.
E. Do not operate the heater without Ground Fault Equipment Protection.

Failure to follow these instructions can result in personal injury and fire.

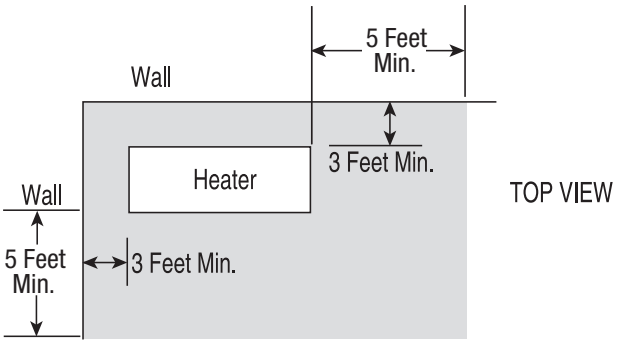

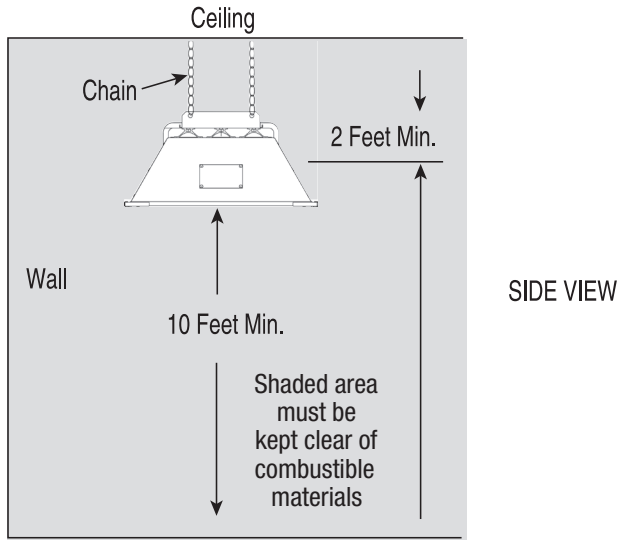

Floor - Non combustible su rface

IMPORTANT INSTRUCTIONS

When using electrical appliances, basic precautions should always be followed to reduce risk of fire, electric shock and injury to persons, including the following:

1. Read all instructions before using this heater.
2. This heater is hot when in use. To avoid burns, do not let bare skin touch hot surfaces. Allow sufficient time for heater to cool before serviceing or cleaning heater.
3. Do not stack or store combustible materials in the radiation path under the heater or in the space a distance of 5 feet from any projected edge of the heater as shown in figure 4.
4. Always disconnect heater when not in use.
5. Do not use outdoors in areas subject to wind.
6. Connect to properly grounded outlets or building ground.
7. This heater has hot surfaces. Do not use it in areas where gasoline, paint or flammable liquids are used or stored.
8. Use this heater only as described in this manual. Any other use not recommended by the manufacturer may cause fire, electric shock or injury to persons.
9. In order to prevent equipment damage, protect with a ground fault equipment protection device such as Chromalox STAR-GF series monitor.
10. **SAVE THESE INSTRUCTIONS**

Wiring

⚠WARNING

ELECRIC SHOCK HAZARD. Disconnect all power before installing or servicing heater. Failure to do so could result in personal injury or property damage. Heater must be effectively grounded in accordance with the National Electrical Code, NFPA 70.

⚠WARNING

All electrical wiring must be done by a qualified person in accordance with National Electrical Code (NEC) and meet all state and local regulations.

1. Use heater only at the voltage specified on the nameplate.
2. Branch circuit wire for connection to heater must be at least 90°C wire. Use copper conductors only.
3. The heater connection points are located in the gasketed terminal enclosure. To remove cover, remove 4 screws on the cover. Remove the cover to expose wiring connection points.
4. Agreen ground terminal is provided in the bottomof the enclosure. The ground wire should be connected before other connections are made.
5. Refer to Table 1 for proper entrance wiring size.
6. Heater can be wired with rigid or flexible conduit.
7. Unless otherwise noted on wiring diagram label (located on heater enclosure), all 3 element heaters are factory pre-wired for 3-phase delta operation. Some units can be converted to single phase operation by changing the wiring. Refer to Table 1 for those heaters that can be converted to single phase. The appropriate wiring diagram (Figure 3) is also located on the bottom of the enclosure.

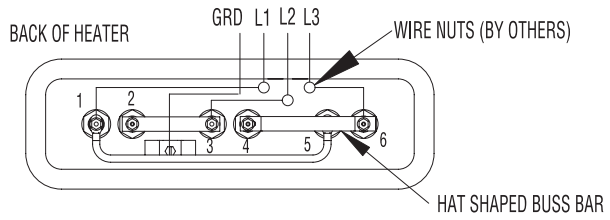

Three Phase Delta Wiring

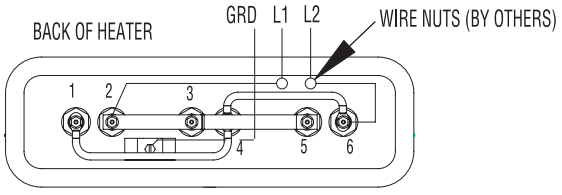

Single Phase Wiring

INSTRUCTIONS FOR FIELD CONVERSION FROM 3 PHASE TO 1 PHASE:

1. Remove nuts from all terminals.
2. Remove all pigtail leads and hat shaped buss bar.
3. Remove end of leadwire on terminal 5 and slip onto terminal 4.
4. Remove leadwire attached to instruction sheet and connect between terminals 4 and 6.
5. Install hat shaped buss bar between terminals 3 and 5.
6. Place pigtail lead marked “L1” on to terminal 2 and pigtail lead marked “L2” on to terminal 6.
7. Install nuts.
8. Connect entrance wiring to pigtail leads “L1” and “L2”. Connect ground to screw provided.
9. Inspect to make sure wiring is per “Single Phase Wiring” above.

Optional Accessories

Chromalox STAR series radiant heaters can be field modified by adding optional kits. Refer to Chart A to select the proper kit.

Portable Cart Kit
The portable cart kit can be used to convert a fixed overhead unit into a portable heating device where a fixed installation is not required. This kit includes wheels, legs, handle, grill(s), baffle (if reqd) and all of the necessary hardware to complete the modification. See instruction bulletin PG435 for details.

Grill Kit
The grill kit consists of one (1.5, 2, 4.5 and 6 kW) or 2 grill sections (13.5kW) and hardware to protect personnel from coming into contact with hot radiant heating elements. See instruction bulletin PG437 for details.

Disconnect Kit
The disconnect kit consists of a complete assembly consisting of a disconnect switch (3 Pole), power terminal block and all hardware to complete the installation. This kit can be mounted to both the fixed, overhead heater or the portable heater; see instruction bulletin PG436 for details.

Hanger Kit
Hanger kits include 24 feet of chain and four S hooks to mount the unit in a fixed overhead position using the universal mounting brackets included on the heater. This kit allows installation distances from the ceiling of 2 feet to 6 feet. See installation diagram Fig. 4 on page 2.

Cord Kits (Portable Only)
Cord kits consist of 25 feet of 90°C cable and a right angle cord fitting which can connect directly to the heater terminal box or disconnect switch (if used). See installation bulletin PF491 for details

Tip Over and Ground Fault Kits
STAR TIP Series Kit attaches to portable heater and de-energizes the heater in the event it is tipped over.

STAR-GF Series Kit mounts to wall that de-energizes heater prior to element failure.

STAR-TG Kit combines the tip over and ground fault feature for portable heaters. See installation bulletin PG436.

Chart A - Kit Selection Guide

Model	Grill Kit	Disconnect Kit	Hanger Kit	Wall Mount Ground Fault	Portable Cart Kit **
STAR-02A-11-F	PCN 111878	PCN 340662	PCN 340654	NA	NA
STAR-02A-81-F	PCN 111878	PCN 340662	PCN 340654	PCN 340777	NA
STAR-02A-21-F	PCN 111878	PCN 340662	PCN 340654	PCN 340785	NA
STAR-02A-71-F	PCN 111878	PCN 340662	PCN 340654	PCN 340793	NA
STAR-02A-41-F	PCN 111878	PCN 340662	PCN 340654	PCN 340806	NA
STAR-02A-61-F	PCN 111878	PCN 340662	PCN 340654	PCN 340814	NA
STAR-05A-81-F	PCN 111894	PCN 340662	PCN 340654	PCN 340777	PCN 340620
STAR-05A-21-F	PCN 111894	PCN 340662	PCN 340654	PCN 340785	PCN 340620
STAR-05A-71-F	PCN 111894	PCN 340662	PCN 340654	PCN 340793	PCN 340620
STAR-05A-41-F	PCN 111894	PCN 340662	PCN 340654	PCN 340806	PCN 340620
STAR-05A-61-F	PCN 111894	PCN 340662	PCN 340654	PCN 340814	PCN 340620
STAR-06A-83-F	PCN 340638	PCN 340662	PCN 340654	PCN 340777	PCN 340830
STAR-06A-23-F	PCN 340638	PCN 340662	PCN 340654	PCN 340785	PCN 340830
STAR-06A-71-F	PCN 340638	PCN 340662	PCN 340654	PCN 340793	PCN 340830
STAR-06A-43-F	PCN 340638	PCN 340662	PCN 340654	PCN 340806	PCN 340830
STAR-06A-63-F	PCN 340638	PCN 340662	PCN 340654	PCN 340814	PCN 340830
STAR-14A-83-F	PCN 340857	PCN 340662	PCN 340654	PCN 340777	PCN 340849
STAR-14A-23-F	PCN 340857	PCN 340662	PCN 340654	PCN 340785	PCN 340849
STAR-14A-71-F	PCN 340857	PCN 340662	PCN 340654	PCN 340793	PCN 340849
STAR-14A-43-F	PCN 340857	PCN 340662	PCN 340654	PCN 340806	PCN 340849
STAR-14A-63-F	PCN 340857	PCN 340662	PCN 340654	PCN 340814	PCN 340849

* Includes Grill(s)

Maintenance

⚠WARNING

ELECRIC SHOCK HAZARD. Disconnect all power before servicing or replacing heating elements.

⚠CAUTION

BURN HAZARD. Hot surfaces. Allow sufficient time for heater to cool before serviceing or cleaning heater.

The reflectors should be kept clean to obtain the maximum radiant output.

Element Replacement

1. Remove Terminal Box Cover.
2. Disconnect lead wires from heater terminals and disengage box from conduit /cable fitting.
3. Remove safety grills (if installed).
4. Remove retainer screw located on the reflector at the terminal end.
5. Loosen (2), 3/8" nuts from the terminal box bracket located on the back of the heater and slide the entire heating element assembly out of the reflector assembly.
6. Remove wires and jumper straps as required to replace the failed heating element(s).
7. Remove bulkhead fitting nuts and washers.
8. Remove failed element and replace with a new element. Replace only with genuine Chromalox "Arctic End" elements. Use of other elements will cause excess temperatures inside terminal box.
9. Place gasket on the bulkhead fitting and insert terminals and fittings into the element holes in the terminal box.
10. Place washers and nuts on bulkhead fittings and tighten.
11 Replace wiring and jumper straps (see Fig. 1).
12. Reassemble by following the reverse procedures (steps 5 through 1).

Renewal Parts Identification

Chart A - Kit Selection Guide

Model	Element***	Element Housing Reflector	Safety Screen	Terminal Gasket Box
STAR-02A-11-F	PCN 106059	234-891755-004	PCN 111878	132-304879-004
STAR-02A-81-F	PCN 106067	234-891755-004	PCN 111878	132-304879-004
STAR-02A-21-F	PCN 106075	234-891755-004	PCN 111878	132-304879-004
STAR-02A-71-F	PCN 106083	234-891755-004	PCN 111878	132-304879-004
STAR-02A-41-F	PCN 106091	234-891755-004	PCN 111878	132-304879-004
STAR-02A-61-F	PCN 106104	234-891755-004	PCN 111878	132-304879-004
STAR-05A-81-F	PCN 106403	234-891755-002	PCN 111894	132-304879-004
STAR-05A-21-F	PCN 106411	234-891755-002	PCN 111894	132-304879-004
STAR-05A-71-F	PCN 106796	234-891755-002	PCN 111894	132-304879-004
STAR-05A-41-F	PCN 106964	234-891755-002	PCN 111894	132-304879-004
STAR-05A-61-F	PCN 106972	234-891755-002	PCN 111894	132-304879-004
STAR-06A-83-F	PCN 106067	234-891755-004	PCN 340638	132-304879-003
STAR-06A-23-F	PCN 106075	234-891755-004	PCN 340638	132-304879-003
STAR-06A-71-F	PCN 106083	234-891755-004	PCN 340638	132-304879-003
STAR-06A-43-F	PCN 106091	234-891755-004	PCN 340638	132-304879-003
STAR-06A-63-F	PCN 106104	234-891755-004	PCN 340638	132-304879-003
STAR-14A-83-F	PCN 106403	234-891755-002	PCN 340857	132-304879-003
STAR-14A-23-F	PCN 106411	234-891755-002	PCN 340857	132-304879-003
STAR-14A-71-F	PCN 106796	234-891755-002	PCN 340857	132-304879-003
STAR-14A-43-F	PCN 106964	234-891755-002	PCN 340857	132-304879-003
STAR-14A-63-F	PCN 106972	234-891755-002	PCN 340857	132-304879-003

*** Includes element supports

Parts Common to All Models:

Bulkhead fitting gasket..... 132-895735-008
Bulkhead fitting washer..... 328-890675-014
Bulkhead fitting nut 200-890615-031
Element Support 291-304869-002

Limited Warranty:

Please refer to the Chromalox limited warranty applicable to this product at http://www.chromalox.com/customer-service/policies/termsofsale.aspx.

Chromalox
103 Gamma Drive
Pittsburgh, PA 15238
(412) 967-3800
www.chromalox.com

© 2026 Chromalox, Inc. All rights reserved.