Hardware Instruction Manual

ACPC

Modular SCR Power Controller



CHROMALOX
Advanced Thermal Technologies

PK575
0037-75599
July 2023

Table of Contents

Important Safeguards 1

1. Initial Instructions 2
1.1 General Description 2
1.2 Features 2
1.3 Product Inspection 3

2. Dimensions & Weights 4
2.1 Template Dimensions 6
2.2 Installation 7

3. Installation and Connection 8
3.1 Electrical Power Supply 8
3.2 Notes on Electrical Safety and Electromagnetic Compatibility 8
3.2.1 CE Marking: EMC 8
3.3 Recommendations for Correct Installation for EMC Purposes 8
3.3.1 Instrument Power Supply 8
3.3.2 Input and Output Connections 8
3.3.3 Installation Notes 8

4. Emission, Immunity and Safety Standards 11

5. Controller Overview 13
5.1 Cleaning/Checking or replacing the Fan - 40 to 300A Models 15
5.2 Cleaning/Checking or replacing the Fan - 400 to 600A Models 16
5.3 Replacing the Internal Fuse (Optional) - 40 to 300 A Models 17
5.4 Replacing the Internal Fuse (Optional) - 400 to 600 A Models 18
5.5 Card Insertion for Fieldbus Interface - 40 to 300 A Models 19
5.6 Card Insertion for Fieldbus Interface - 400 to 600 A Models 20
7.5 Connection of Expansion Modules (for 2-Phase or 3-Phase Configuration) 21

6. Connections and Indicators 22
6.1 Inputs 24
6.2 Outputs 27

7. Electrical Connections 30
7.1 Description of Dip-Switches 33
7.2 Serial Communication Ports 34
7.3 Connection Example: Power Section 40
40 to 300 A Models 40
400 to 600 A Models 47

8. Inductive & Transformer Coupled Load Guidelines 55

9. Firing (Trigger) Mode Overview 55
9.1 Trigger Modes 55
9.2 Digital Input or PWM (40 to 300A) 59
9.3 Digital Input or PWM (400 to 600A) 60

10. Installation of Modbus Serial Network 61

11. Technical Characteristics 62

12. Ordering Information 72

13. Accessories 73

Important Safeguards

⚠WARNING

HIGH VOLTAGE (up to 690 VAC) is used in the operation of this equipment; DEATH ON CONTACT may result if personnel fail to observe safety precautions.

Learn the areas containing high-voltage connections when installing or operating this equipment.

⚠WARNING

Be careful not to contact high-voltage connections when installing or operating this equipment.

Before working inside the equipment, turn power off and ground all points of high potential before touching them.

⚠CAUTION

The owner/installer must provide all necessary safety and protection devices and follow all current electrical wiring standards and regulations. Failure to do so may compromise the integrity of the controller and/or cause product failure resulting in a safety risk to operational and service personnel.

⚠CAUTION

This controller utilizes a heat sink which is designed to cool the unit during operation. Under no circumstance should air flow around the controller be compromised in any way. Failure to do so may result in the overheating of the controller, product failure, product temperatures and even fire.

⚠WARNING

During continuous operation, the heat sink can reach very high temperatures, and keeps a high temperature even after the unit is turned off due to its high thermal inertia.

Higher voltages may be present. DO NOT work on the power section without first cutting out electrical power to the panel. Failure to do so may cause serious injury or death.

⚠WARNING

ELECTRIC SHOCK HAZARD: Any installation involving control equipment must be performed by a qualified person and must be effectively grounded in accordance with the National Electrical Code to eliminate shock hazard.

1. Initial Instructions

1.1 General Description

The “ACPC” series of microprocessor advanced solid state power units controls high electric powers with different types of heating elements, single-phase, bi-phase or triphase. Current levels range from 40 A to 600 A, nominal voltage from 480 Vac ,600 Vac, 690 Vac.

The command input is configurable and accepts 0-10V, 0/4- 20mA signals, potentiometer, logic signals, includ-ing with PWM modes for cost effective solutions.

The device can also be operated via Modbus RTU se-rial communication, with IN/OUT chain connections fa-cilitated by plug-in RJ10 (telephone) connectors.

The several trigger modes are software configurable and provide:

- ZC: Zero Crossing constant cycle time (settable in range 1-200sec), for conventional loads
- BF: Burst-Firing, Zero crossing with optimized minimum cycle time, for systems with low thermal inertia, medium-wave IR lamps
- HSC: Half Single Cycle Zero Crossing corresponds to Burst Firing that manages single semi-cycles of conduction or stop cycles, useful for short-wave IR lamps, reduces flickering and limits generation of EMC noise on the power line (applied only to single-phase load or open delta).
- PA: Phase angle control, useful for short-wave IR lamps, transformer primaries. Completely eliminates flickering of load filaments, but generates EMC noise on power line (harmonics).

Soft Start ramp functions can be assigned to these controls, with options such as “current limit” that keeps current peaks at power-on and RMS current level at full power under control.

Thanks to sophisticated Hardware and Software solutions, you can precisely control different types of loads.

Phase angle control (the only control method that completely eliminates IR lamp flickering), matched with current, voltage, or load power feedback functions, let you confidently use “critical” applications such as (for example), special resistors such as special Super Khantal™ heating elements, Silicon Carbide resistors, or transformer primaries either single-phase or triphase.

ACPC runs complete diagnostics of current, voltage, power, and temperature levels:

Current Diagnostics:

- Total and partial load interrupt alarm
- Self-learn function of alarm limit for interrupted load
- Alarm for SCR in short circuit
- Alarm for load in short circuit or overcurrent
- Alarm for interrupted internal fuse

Voltage Diagnostics:

- Alarm for absence of phase
- Signal for incorrect rotation of 3 phases (for triphase applications)
- Alarm for triphase line unbalance

Temperature Diagnostics:

- Measurement of power module temperature
- Alarm for over temperature of power module
- Measurement of power terminals temperature
- Alarm for over temperature of power terminals
- Alarm for absence of 24V supply to cooling fan

Power control with Soft start ramp limits load, optimizes the consumptions and increases the load operating duration.

Parameters can be configured from an optional keypad with LCD screen that attaches magnetically to the front panel and from PC with the CF_eXpress configuration kit, which lets you save all parameters in a configuration file that is easy to manage and to copy to other devices.

ACPC always provides an RS485 serial connection (PORT1) with Modbus RTU protocol to control cur-rents, voltages, powers, load status, and device status from the supervisor terminal (HMI) or PLC.

A second (optional) communication port is offered that lets you choose from among the following Fieldbuses: Modbus RTU, Profibus DP, CanOpen, Devicenet, Mod-bus-TCP, Ethernet IP, EtherCAT .

1.2 Features

ACPC is single-zone advanced solid state power unit, extremely compact, equipped with different optional functions; it offers an exclusive combination of perfor-mance, reliability, and flexibility.

In particular, this new line of Chromalox solid state re-lays is the ideal solution for sectors demanding high performance and continuity of service, such as:

- Thermoforming
- Blowing
- Hot runners for injection presses
- Texturizing of fibers
- Heat treatment furnaces
- Woodworking machines
- Glass tempering furnaces

The modules Series ACPC are based on an extremely versatile hardware and software platform, with options to select the best I/O configuration for your system.

ACPC is used for the power control of single-phase, 3-Phase, 2-Leg and 3-Phase, 3-Leg loads, including resistive loads with high and low temperature coeffi-cient, short wave IR lamps, or transformer primaries.

1.3 Product Inspection

Read the following preliminary instructions before in-stalling and using the ACPC modular power controller.

This will make start-up faster and avoid some prob-lems that could be mistakenly interpreted as malfunc-tions or limitations of the controller

Immediately after unpacking the unit, check the order code and the other data on the label attached to the outside of the container.

Write them on the following table.

This data must always be available and given to Chromalox Customer Care representatives if technical ser-vice is needed.

SN .....(Serial Number)

CODE .....(Product code)

TYPE.....(Order code)

SUPPLY .....(Type of electrical power supply)

VERS .....(Firmware Version)

Check that the controller is in perfect condition, was not damaged during shipment, and that the package also contains the CD that contains other useful information such as the “Configuration and Programming” manual, memory map etc...

Immediately report any errors, shortages, or signs of damage to your Chromalox dealer.

Check that the order code matches the configuration requested for the intended application by consulting the section: “Technical-Commercial Information.”

See paragraph “ Dimensions and mounting” before in-stalling the ACPC on the machine/host system control panel.

To configure with a PC, use the Chromalox C-PWR software and relative connection cable.

For the order code, see Section “Technical-Commercial Information”.

Users and/or system integrators who want detailed information on serial communication between Chromalox standard and/or industrial PCs and Chromalox Programmable Instruments can access Technical Reference Documents on serial communication and MODBus protocol, etc., in Adobe Acrobat format on the Chromalox website www.chromalox.com:

- Serial Communication
- MODBus Protocol
- FIELDBUS protocols (Various)

Before calling Chromalox Customer Care in case of assumed malfunctions, please see the Troubleshooting Guide in the “Maintenance” section and, if necessary, the F.A.Q. (Frequently Asked Questions) section on the Chromalox website www.chromalox.com

Diagnostic Alarm Options	
0	Absent
1	Partial or total load failure alarm. (HB) + diagnostic alarms

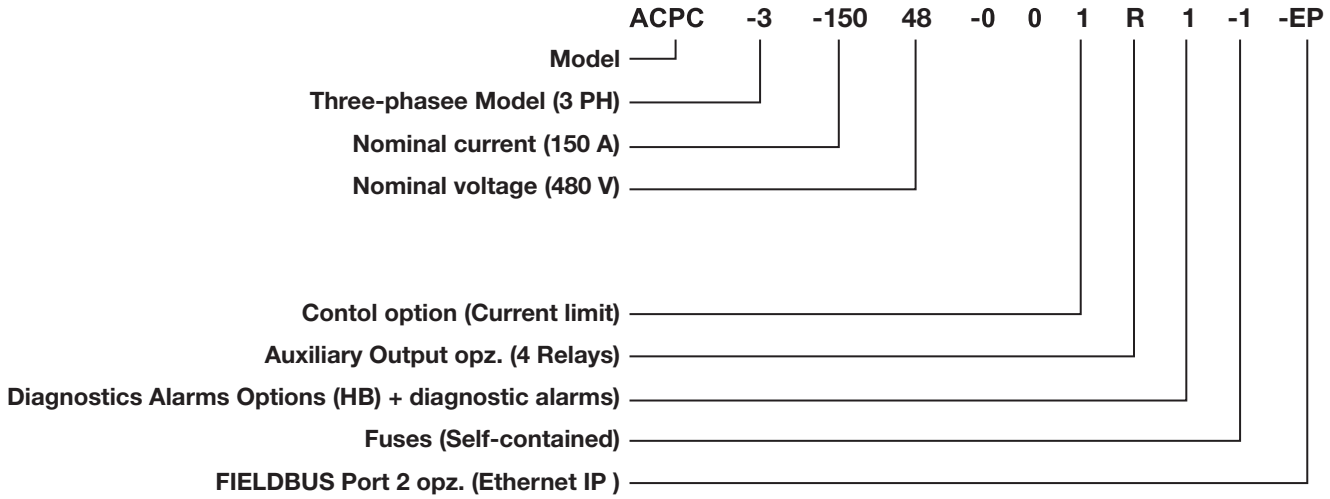

2. Dimensions and Weights

ACPC 40A to 300A Dimensions, In. (mm)

ACPC1

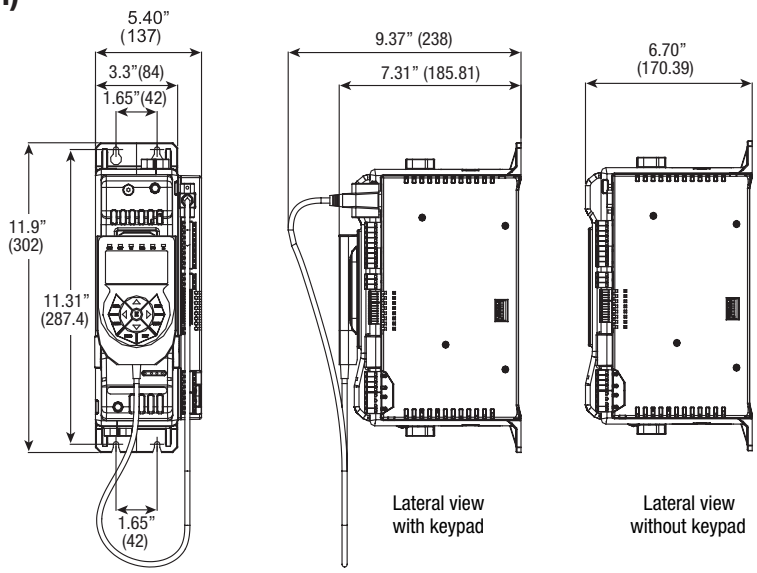

Weights Lbs (kg)

Model	Amps	Weight Lbs (kg.)
ACPC1	40/60/100	7.05 (3.2kg)
ACPC2	40/60/100	11.46 (5.2kg)
ACPC3	40/60/100	15.87 (7.2kg)
ACPC1	150/200/250/300	7.94 (3.6kg)
ACPC2	150/200/250/300	13.23 (6.0kg)
ACPC3	150/200/250/300	18.52 (8.4kg)

ACPC2

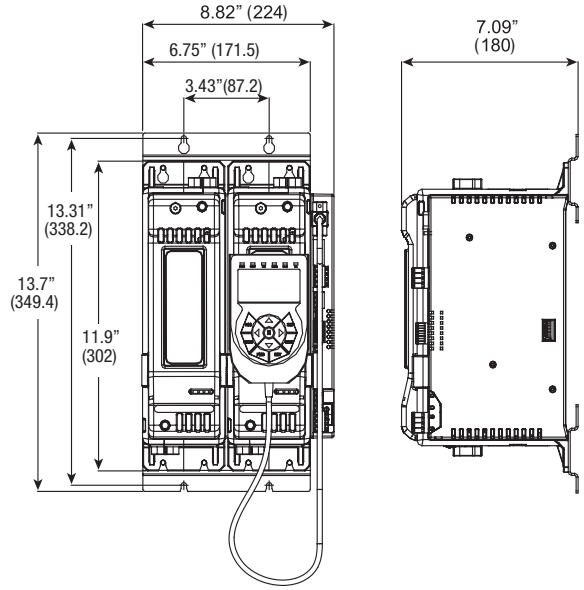

ACPC3

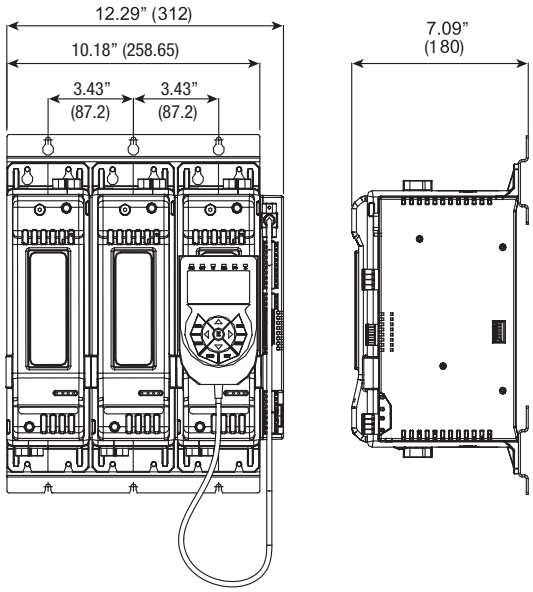

ACPC 400A to 600A Dimensions, In. (mm)

ACPC1

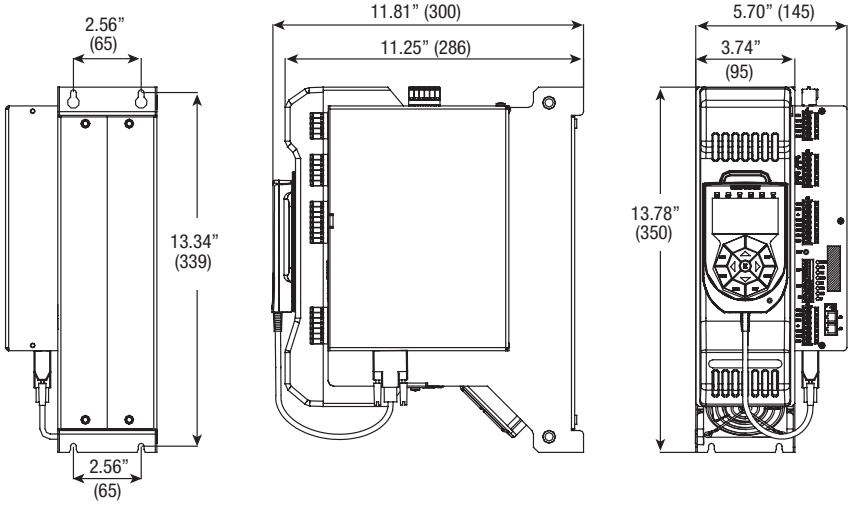

ACPC2

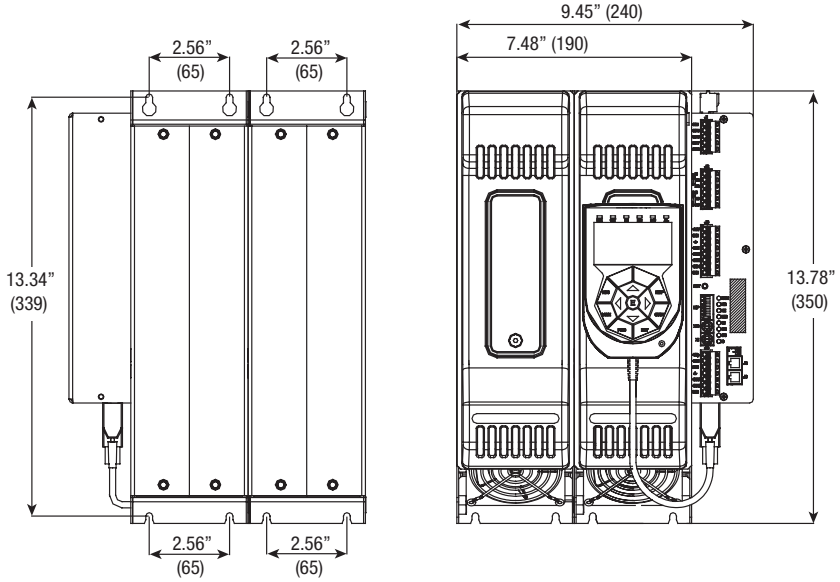

Weights Lbs (kg)

Model	Amps	Weight Lbs (kg.)
ACPC1	400	17.63 (8 Kg)
ACPC2	400	34.17 (15.5 Kg)
ACPC3	400	49.60 (22.5 Kg)
ACPC1	500/600	24.25 (11kg)
ACPC2	500/600	46.30 (21kg)
ACPC3	500/600	68.34 (31kg)

ACPC3

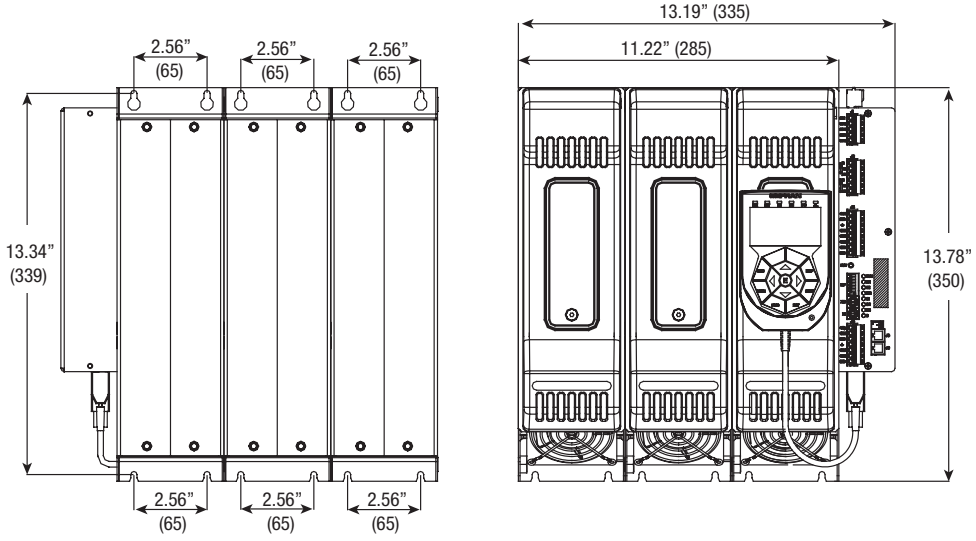

2.1 Template Dimensions

Panel Mounting and Cutout Dimensions - 40 to 300A Models

ACPC MASTER

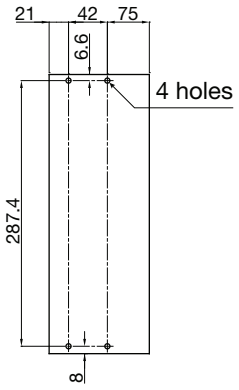

ACPC2

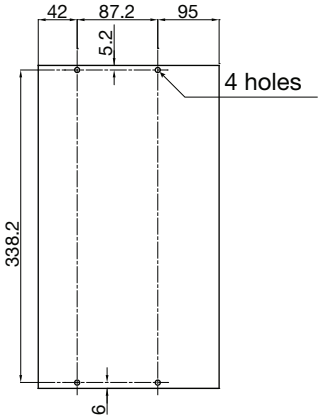

ACPC3

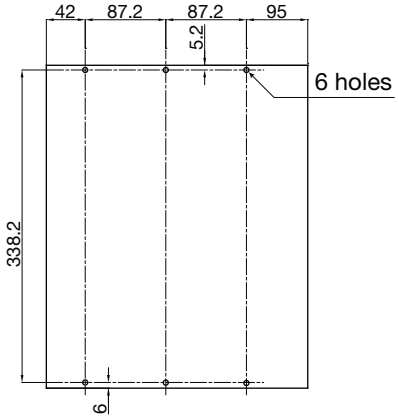

Fastening may be done with (5MA). All dimensions are expressed in mm.

Panel Mounting and Cutout Dimensions - 400 to 600 A Models

ACPC MASTER

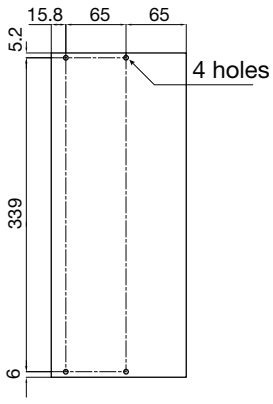

ACPC2

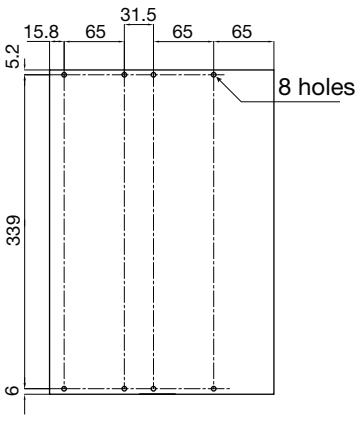

ACPC3

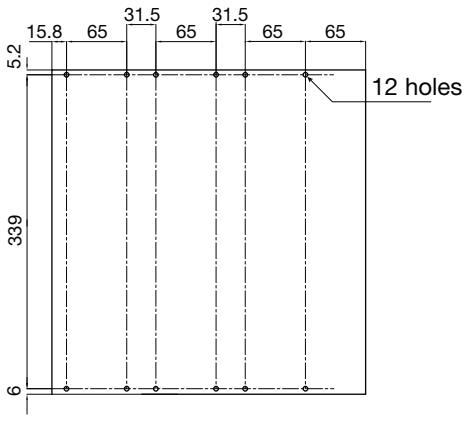

2.2 Installation

40 to 300A Models

⚠WARNING

ATTENTION: RESPECT THE MINIMUM DISTANCES SHOWN TO PROVIDE ADEQUATE AIR CIRCULATION.

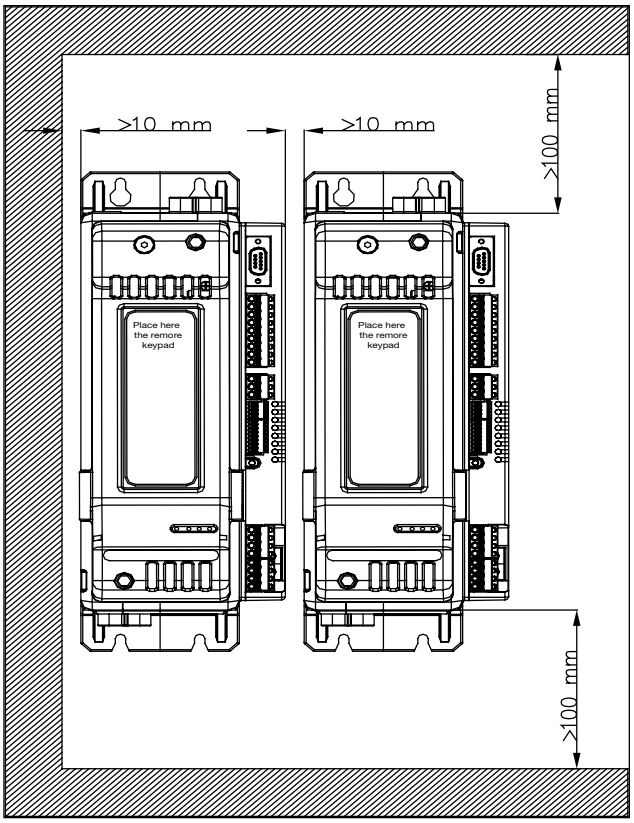

400 to 600A Models

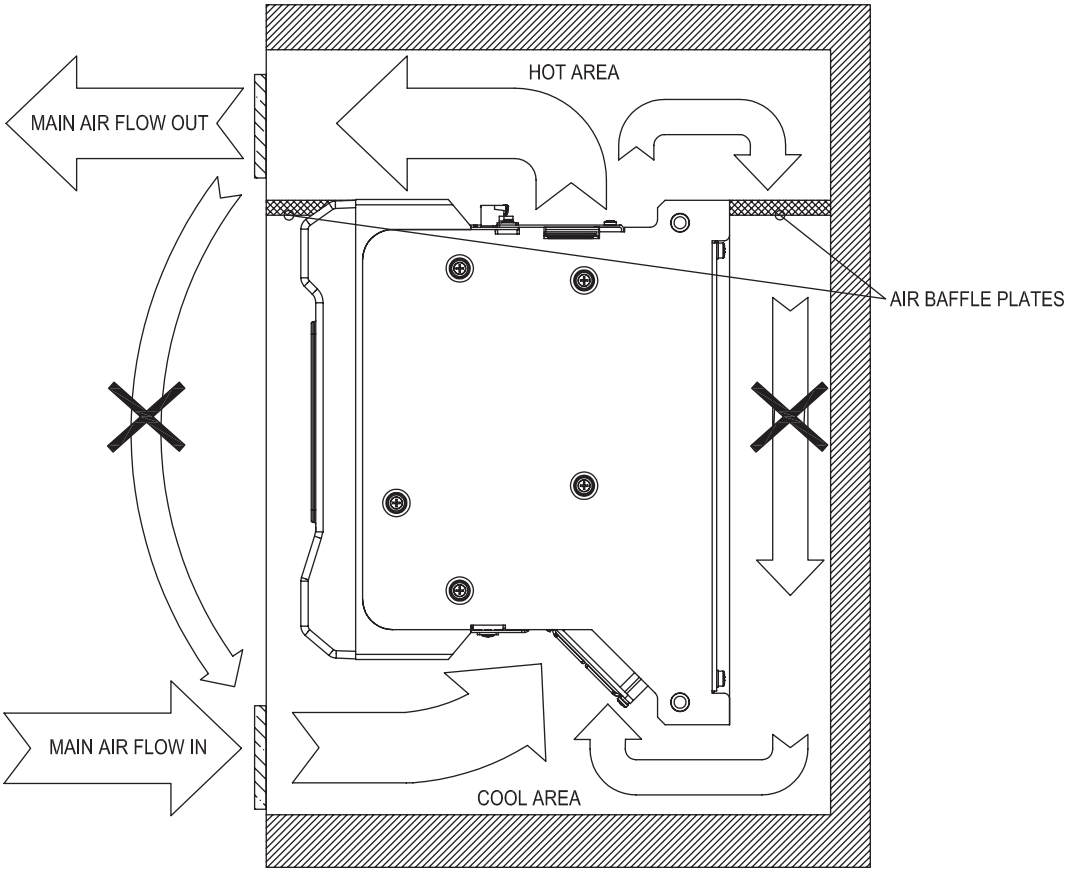

3. Installation and Connection

This section contains the instructions needed for cor-rect installation of ACPC modular power controller on the machine/host system control panel and for correct connection of the power supply, inputs, outputs and interfaces.

⚠CAUTION

CAREFULLY READ THE FOLLOWING WARNINGS BEFORE INSTALLING THE INSTRUMENT!

Disregard of such warnings could create electrical safety and electromagnetic compatibility problems, as well as void the warranty.

3.1 Electrical Power Supply

- the controller DOES NOT have an On/Off switch: the user must install switch/isolator conforming to safety requisites (CE mark) to cut off the power supply up-line of the controller.

  The switch must be installed in the immediate vicinity of the controller in easy reach of the operator.

  A single switch can be used for multiple devices.

* the earth connection must be made with a specific lead

- If the product is used in applications with risk of harm to persons or damage to machines or materials, it MUST be equipped with auxiliary alarm devices.

  It is advisable to provide the ability to check for tripped alarms during regular operation.

  DO NOT install the product in rooms with hazardous (inflammable or explosive) atmosphere; it may be connected to elements that operated in such atmosphere only by means of appropriate interfaces that conform to current safety standards.

3.2 Notes on electrical safety and electromagnetic compatibility:

3.2.1 CE MARKING: EMC (electromagnetic compatibility) conformity

In compliance with Directive 2014/30/EU and following modifications.

Series ACPC are mainly intended for industrial use, in-stalled on panels or control panels of production pro-cess machines or systems.

For purposes of electromagnetic compatibility, the most restrictive generic standards have been adopted, as shown on the table.

3.2.2 LV (low voltage) conformity in compliance with Directive 2014/35/EU.

EMC compliance has been verified with respect to the information in Tables 1 and 2.

3.3 Recommendations for Correct Installation for purposes of EMC

3.3.1 Instrument Power Supply

- The power supply for the electronic instrumentation on the panels must always come directly from a cut-off device with fuse for the instrument part.
- Electronic instrumentation and electromechanical power devices such as relays, contactors, solenoids, etc., MUST ALWAYS be powered by separate lines.
- When the power supply line of electronic instruments is heavily disturbed by switching of thyristor power groups or by motors, you should use an isolation transformer only for the controllers, grounding its sheathing.
- It is important for the system to be well-grounded:
  - voltage between neutral and ground must not be > 1V Ohmic resistance must be < 6Ω;
- If the grid voltage is highly unstable, use a voltage stabilizer.
- In proximity of high-frequency generators or arc welders, use adequate grid filters.
- The power supply lines must be separate from instrument input and output lines.
- Supply from Class II or from limited energy source

3.3.2 Input and Output Connections

Before connecting or disconnecting any connection, always check that the power and control cables are isolated from voltage.

Appropriate devices must be provided: fuses or automatic switches to protect power lines.

The fuses present in the module function solely as a protection for the ACPC semiconductors.

- Connected outside circuits must be doubly isolated.
- To connect analog inputs, strain gauges, linears, (TC, RTD), you have to:
  - physically separate the input cables from those of the power supply, outputs, and power connections.
  - use braided and shielded cables, with sheathing grounded at a single point.

3.3.3 Installation notes

Use the extra-rapid fuse indicated in the catalogue according to the connection example equipped.

Moreover, the applications with solid-state units require a safety automatic switch to section the load power line. To ensure the high reliability of the device, it is necessary to install it properly inside the panel so to obtain

an adequate thermal exchange. Fit the device vertically (maximum angle 10° to the vertical axis) see figure.

- Vertical distance between a device and the panel wall >100mm
- Horizontal distance between a device and the panel wall at last 10mm
- Vertical distance between a device and the next one at last 300mm.
- Horizontal distance between a device and the next one at last 10mm.

Check that the cable holder runners do not reduce these distances, in this case fit the cantilever units opposite the panel so that the air can flow vertically without any obstacles.

- dissipation of device thermal power with effects on installation room temperature.
- thermal power dissipation with limits on installation room temperature.
- requires exchange with external air or an air conditioner to transfer dissipated power outside the panel.
- maximum limits of voltage and derived power of transients on the line, for which the solid state power unit contains protective devices (based on the model).
- presence of dispersion current in ACPC in noncon-ducting state (current of a few mA due to RC Snub-ber circuit to protect the thyristor).

Chromalox assumes no liability for any damage to persons or property deriving from tampering, from incorrect or improper use, or from any use not conforming to the characteristics of the controller and to the instructions in this User Manual.

Installation Diagram – 40 to 300A

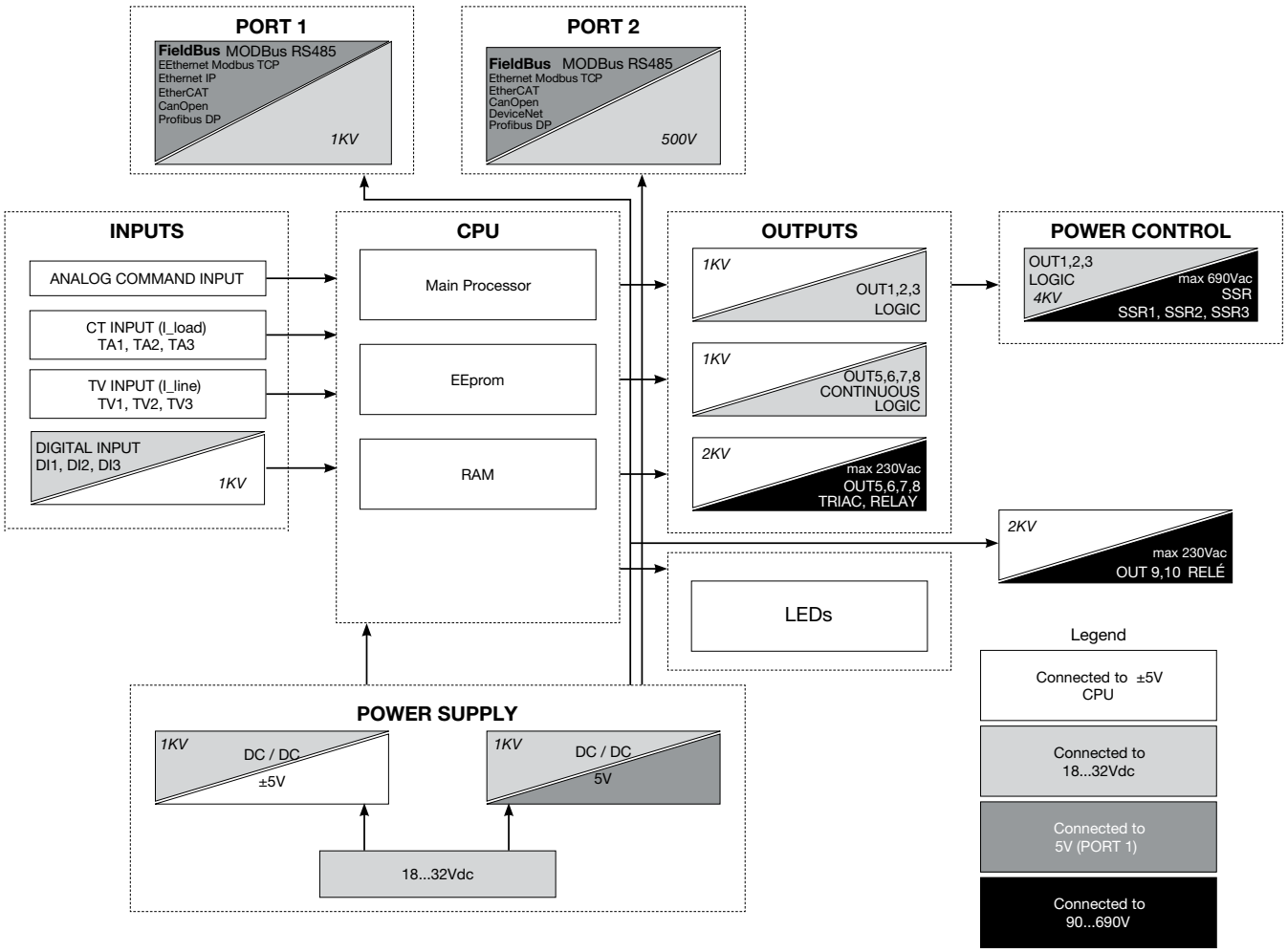

Installation Diagram – 400 to 600A

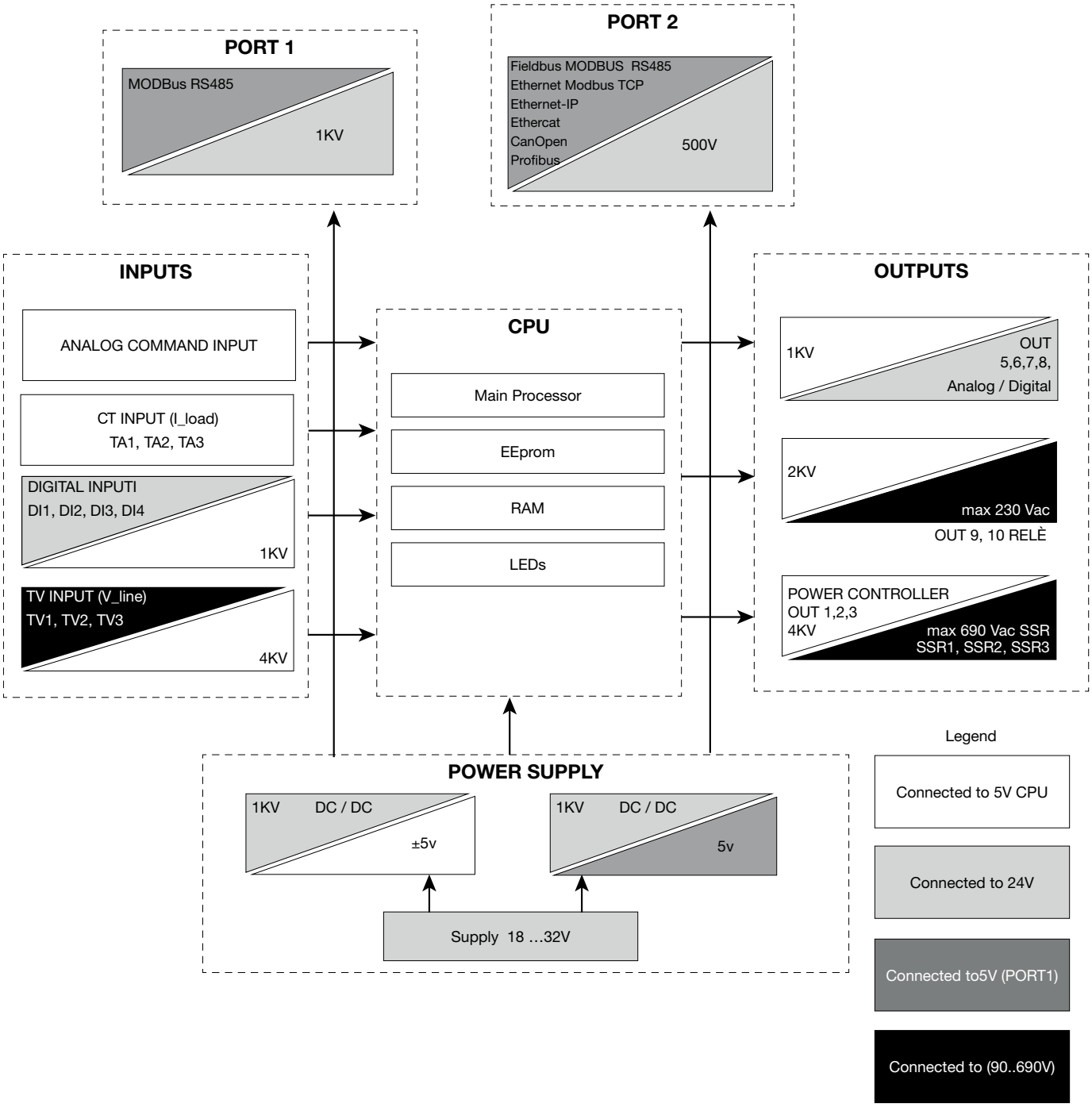

4. Emission, Immunity and Safety Standards

40 to 300A Models

Table 1: EMC Emission

AC semiconductor motor controllers and conductors for non-motor loads	EN 60947-4-3	
Emission enclosure compliant in firing mode single cycle and phase angle if external filter fitted	EN 60947-4-3 CISPR-11 EN 55011	Class A Group 2

Table 2: EMC Immunity

Generic standards, immunity standard for industrial environments	EN 60947-4-3	
ESD immunity	EN 61000-4-2	4 kV contact discharge 8 kV air discharge
RF interference immunity		10 V/m amplitude modulated 80 MHz-1 GHz 10 V/m amplitude modulated 1.4 GHz-2 GHz
Conducted disturbance immunity		10 V/m amplitude modulated 0.15 MHz-80 MHz
Burst immunity	EN 61000-4-4	2 kV power line 2 kV I/O signal line
Surge immunity	EN 61000-4-4/5	Power line-line 1 kV Power line-earth 2 kV Signal line-earth 2 kV Signal line-line 1 kV
Magnetic fields immunity	Tests are not required. Immunity is demonstrated by the successful completion of the operating capability test	
Voltage dips, short interruptions and voltage immunity tests	EN 61000-4-11	100%U, 70%U, 40%U,

Table 3: LVD Safety

Safety requirements for electrical equipment for measurement, control and laboratory use	EN 61010-1 UL 508	

ATTENTION

This product has been designed for class A equipment. Use of the product in domestic environments may cause radio interference, in which case the user may be required to employ additional noise mitigation methods.

EMC filters are required in Phase Angle firing mode. The filter model and current level depend on the configura-tion and load used. The power filter MUST be connected as close as possible to the ACPC. You can use a filter connected between the power line and CTF or an LC group connected between the ACPC output and the load.

The CE declaration of conformity is available on request.

400 to 600A Models

Table 1: EMC Emission

AC semiconductor motor controllers and conductors for non-motor loads	EN 60947-4-3	
Emission enclosure compliant in firing mode single cycle and phase angle if external filter fitted	EN 60947-4-3, CISPR-11 EN 55011	Class A Group 2

Table 2: EMC Immunity

Generic standards, immunity standard for industrial environments	EN 60947-4-3	
ESD immunity	EN 61000-4-2	4 kV contact discharge 8 kV air discharge
RF interference immunity		10 V/m amplitude modulated 80 MHz-1 GHz 10 V/m amplitude modulated 1.4 GHz-2 GHz
Conducted disturbance immunity		10 V/m amplitude modulated 0.15 MHz-80 MHz
Burst immunity	EN 61000-4-4	2 kV power line 2 kV I/O signal line
Surge immunity	EN 61000-4-4/5	Power line-line 1 kV Power line-earth 2 kV Signal line-earth 2 kV Signal line-line 1 kV
Magnetic fields immunity	Tests are not required. Immunity is demonstrated by the successful completion of the operating capability test	
Voltage dips, short interruptions and voltage immunity tests	EN 61000-4-11	100%U, 70%U, 40%U,

Table 3: LVD Safety

Safety requirements for electrical equipment for measurement, control and laboratory use	EN 61010-1 UL 508	

ATTENTION

This product has been designed for class A equipment. Use of the product in domestic environments may cause radio interference, in which case the user may be required to employ additional noise mitigation methods.

EMC filters are required in Phase Angle firing mode. The filter model and current level depend on the configura-tion and load used. The power filter MUST be connected as close as possible to the ACPC. You can use a filter connected between the power line and CTF or an LC group connected between the ACPC output and the load.

The CE declaration of conformity is available on request.

5. Controller Overview

40 to 300A Models

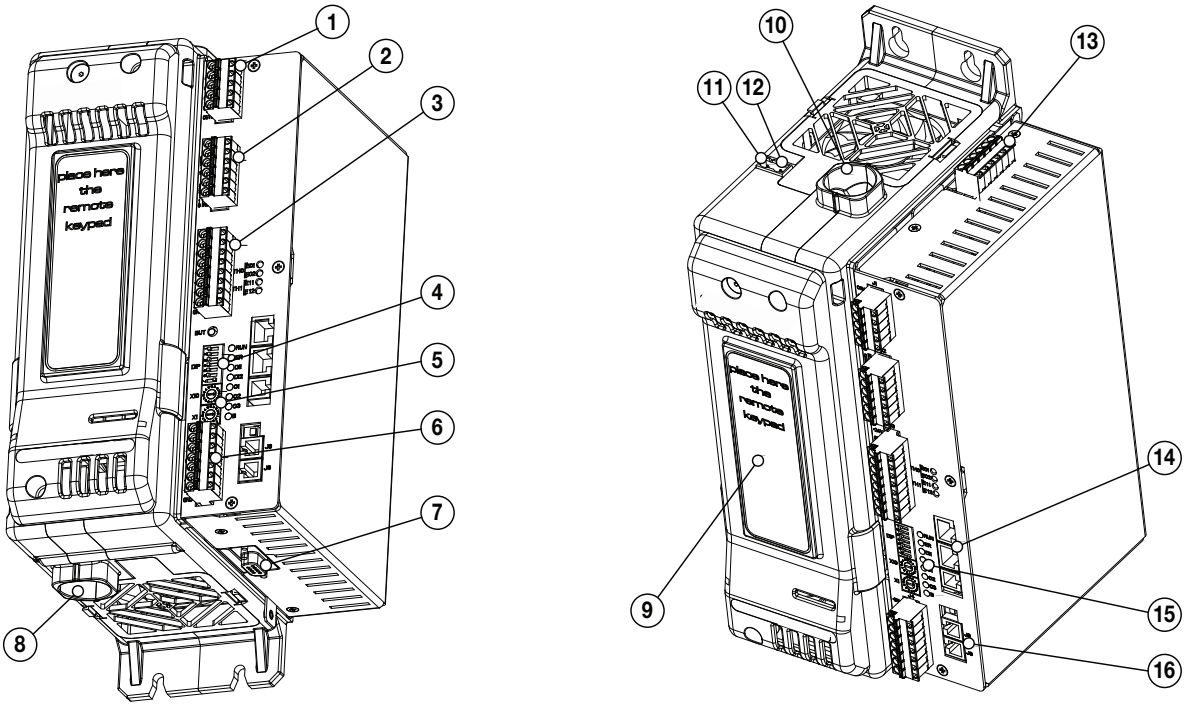

1	Auxiliary output connector
2	Relay output connector
3	24V digital input connector and power supply
4	Dip switch configuration
5	Rotary switches (address)
6	Connector with 3 analog inputs
7	Keypad connector
8	Load terminal (pre-split protection grid)
9	Internal fuse protection cover
10	Line terminal (pre-split protection grid)

11	V-load measurement connector
12	V-line measurement connector
13	3-way external CT input connector
14	Port2 Fieldbus connectors and led
15	Operating status LED
16	Port1 RS 485 Modbus RTU

400 to 600A Models

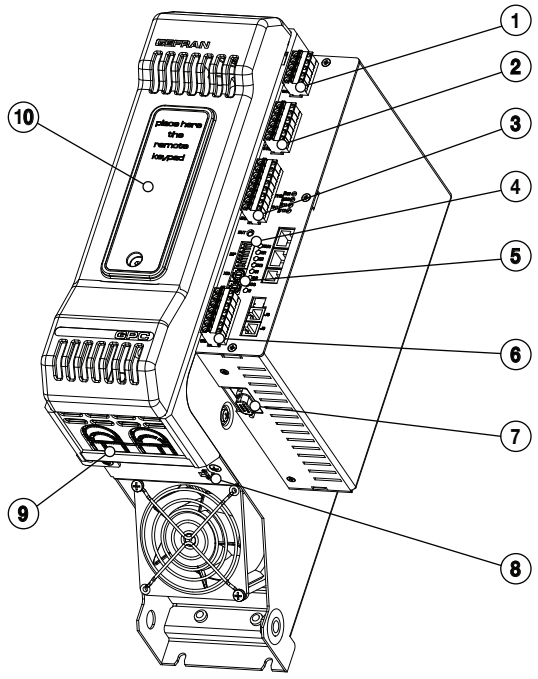

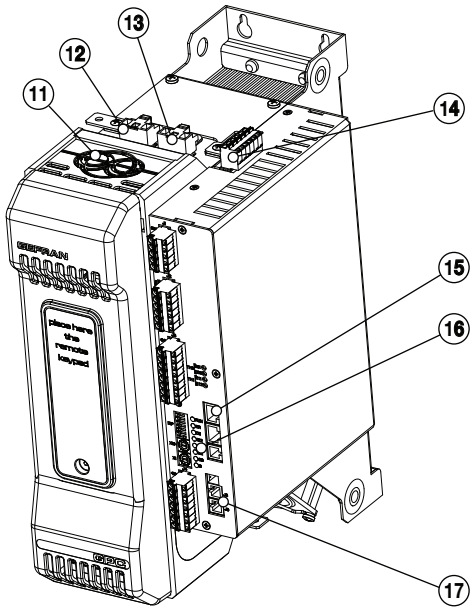

1	Auxiliary output connector
2	Relay output connector
3	24V digital input connector and power supply
4	Dip Switch configuration
5	Rotary Switch (address)
6	3 analog input connector
7	Keypad connector
8	24 V fan power supply output connector
9	Load terminal (pre-split protection grid)

10	Cover on internal fuse protection and Line / Load connections
11	Line terminal (pre-split protection grid)
12	V-load measurement connector
13	V-line measurement connector
14	3-way external CT input connector
15	Port2 Fieldbus connectors and led
16	Operating status led
17	Port1 RS 485 Modbus RTU

5.1 Cleaning/Checking or Replacing the Fan – 40 to 300A Models

Periodic CleaningEvery 6-12 months (depending on the dust level of the installation) blow a compressed air jet downward through the upper rectangular cooling grilles (on the side opposite the fan). This will clean the internal heat dissipater and the cooling fan.

IN CASE OF OVERHEAT ALARM:

If periodic cleaning does not eliminate the problem, do as follows:

1. Remove the fan support grille by detaching the two support tabs
2. Disconnect the fan connector from the board
3. Check the condition of the fan
4. Clean or replace the fan
   Attention: check that the arrow (on the fan) indicating the direction of air flow is pointing to the heat sink
5. Insert the connector into the board
6. Insert the fan support grille until it attaches
7. Power up the device and check fan rotation when at least one load is on

1	Fan
2	Lower Grill (Ventilation Intake)
3	Detail of insertion of fan connector in PCB

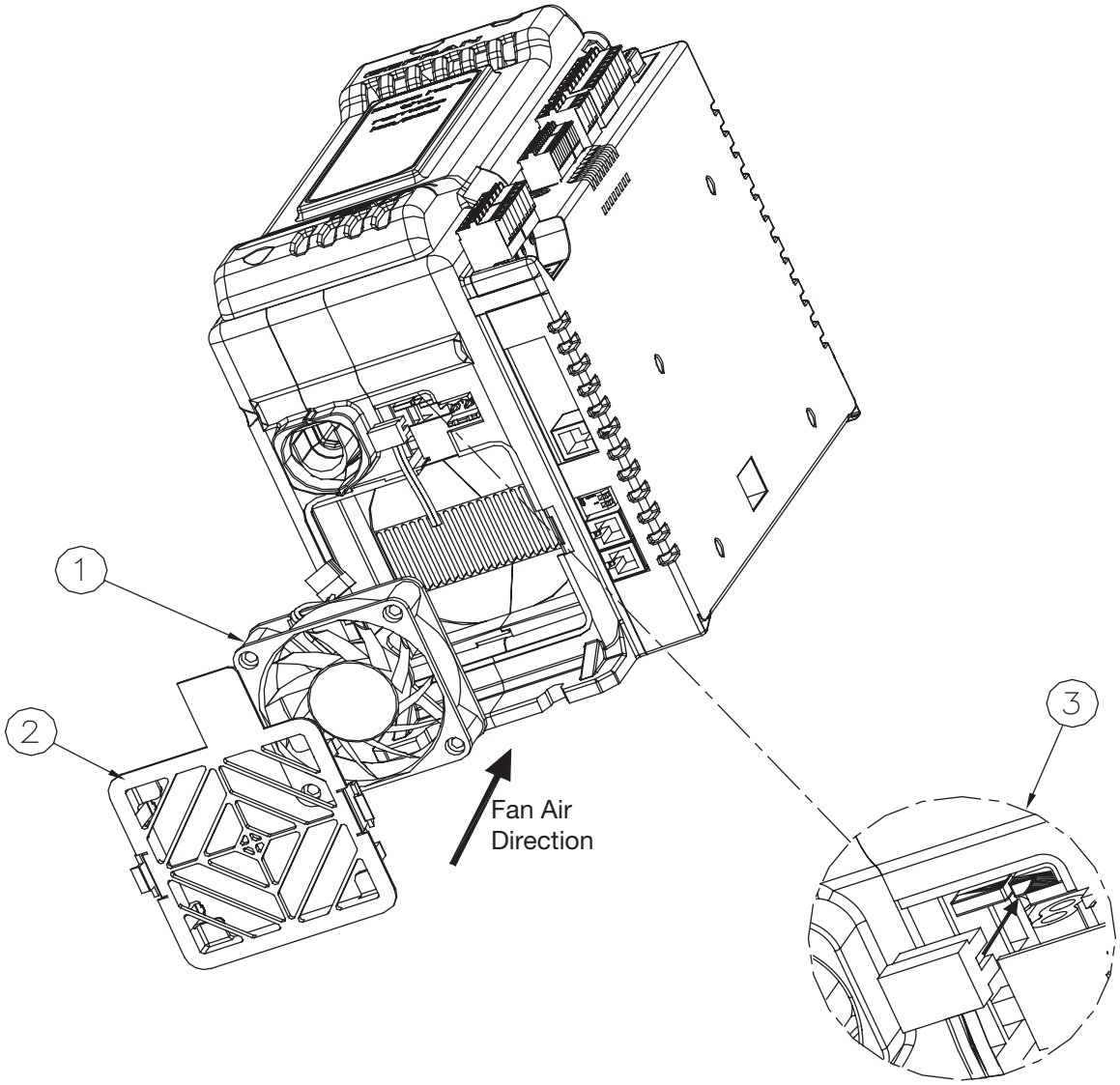

5.2 Cleaning/Checking or Replacing the Fan – 400 to 600A Models

Every 6-12 months (depending on the dust level of the installation) blow a compressed air jet downward through the upper rectangular cooling grilles (on the side opposite the fan). This will clean the internal heat dissipater and the cooling fan.

IN CASE OF OVERHEAT ALARM:

If periodic cleaning does not eliminate the problem, perform the following operations after first checking that the ACPC has been turned off and cut off from the electrical power supply to ensure the operator's safety:

1. Extract the 24V power supply connector from the fan.
2. Use a crosshead screwdriver to unscrew the two screws holding the fan in place (see drawing).
3. Extract the fan, complete with its protective grid, and inspect.
4. Clean or replace the fan.
   CAUTION: before putting the fan back into the product, make sure that the arrow showing the direction of the air flow on the fan is pointing toward the dissipater.
5. Insert the fan, complete with its protective grid, centring it on the two reference pins.
6. Screw in the two screws fixing it in place with a crosshead screwdriver, tightening to a torque of 0.8 Nm.
7. Insert the fan's 24V power supply connector.
8. Turn on the power to the product and check that the fan turns in the right direction.

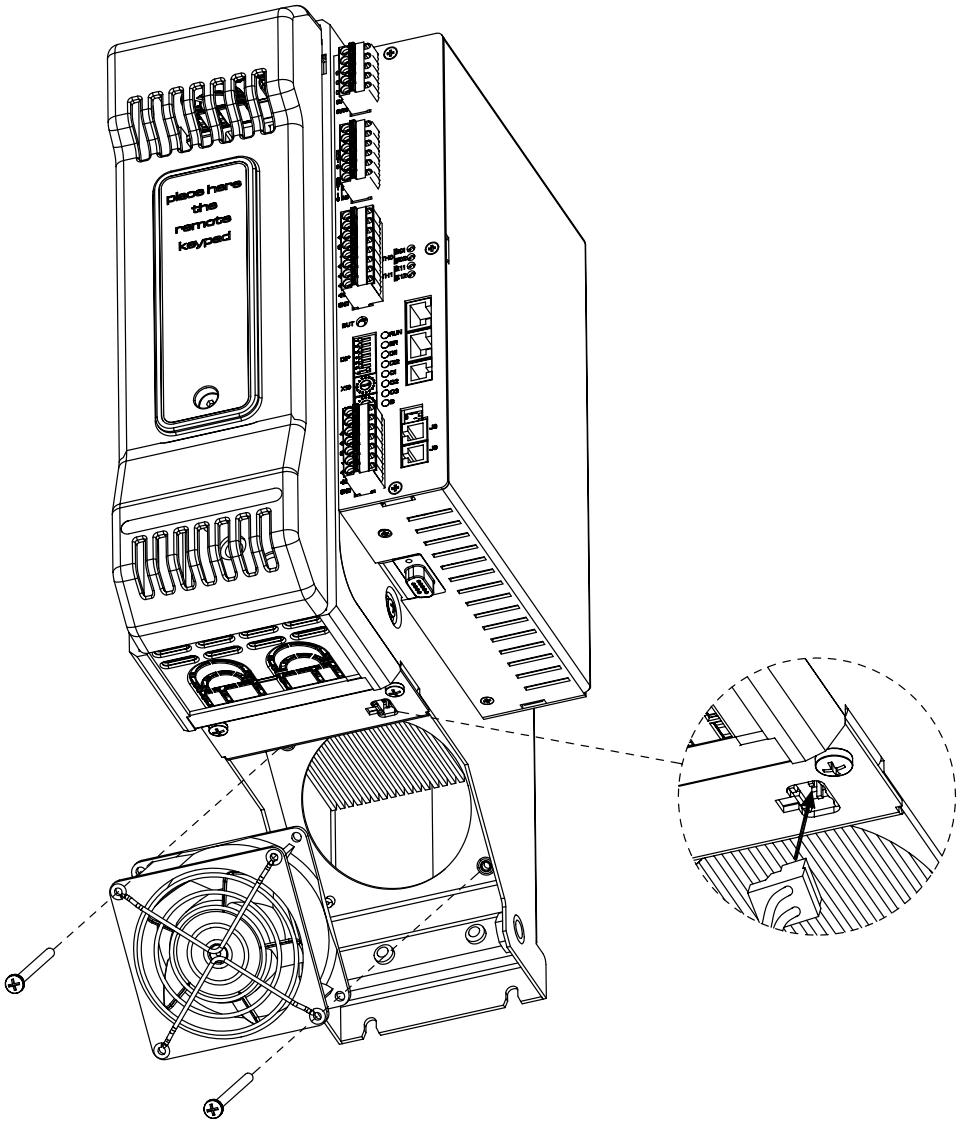

5.3 Replacing the Internal Fuse (Optional) – 40 to 300 A Models

CAUTION: cut off power before and during fuse substitution procedure.

Every 6-12 months (depending on the dust level of the installation) blow a compressed air jet downward through the upper rectangular cooling grilles (on the side opposite the fan). This will clean the internal heat dissipater and the cooling fan.

1. Undo the cover fastening screw (1)
2. Remove the cover following the movement indicated by the arrow (2)
3. In this way the fuse is discovered (3)
4. Loosen the two fastening nuts of fuse by means of tube-shaped spanner N.13 (ACPC 40...150)
5. It is not necessary to remove the nuts as the fuse N.17 (ACPC 200...300 A) is slipped off its seat by turning it (4) and extracting it (5) as indicated by the arrows
6. Insert the new fuse as indicated by the arrows (6,7)

⚠WARNING

WARNING: the washer must stay between the nut and the fuse (NOT under the fuse).

7. Fasten the two nuts by the 3-4 Nm torque tube-shaped spanner N. 13 (ACPC 40...150) ,tube-shaped spanner N17 (ACPC 200...300 A)
8. Replace the cover pointing it to the lower part (pay attention to the connection tooth)
9. Fasten the cover by the specific screw in side (1)

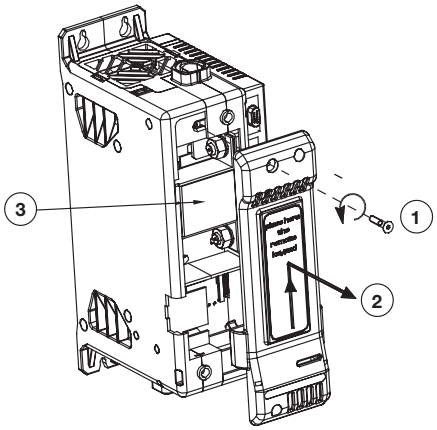

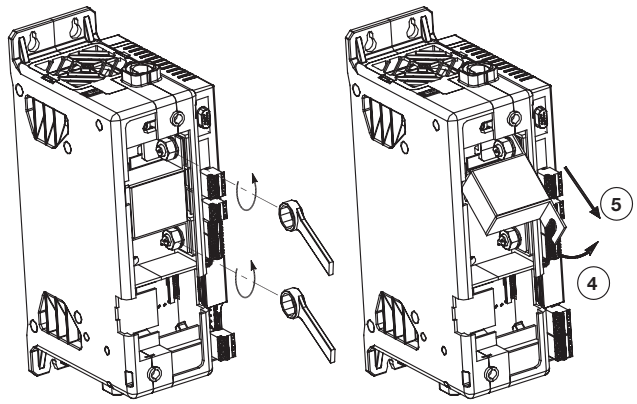

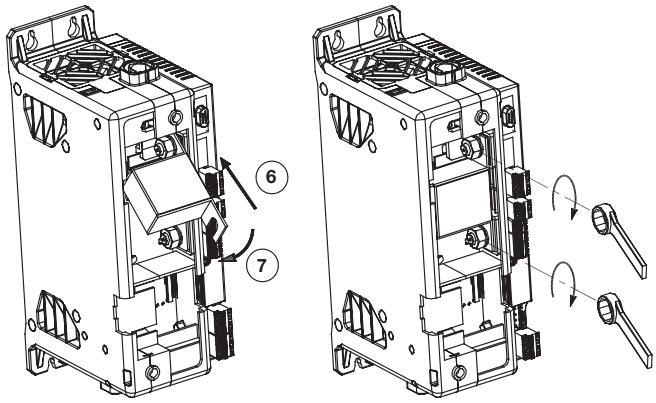

5.4 Replacing the Internal Fuse (Optional) – 400 to 600 A Models

⚠CAUTION

CAUTION: cut off power before and during fuse substitution procedure.

1. Unscrew the screw (1) holding the cover in place
2. Remove the cover, in the direction shown by the arrow (2).
3. The fuse is revealed (3).
4. Slacken the two bolts fixing the fuse in place with a No.19 spanner (ACPC 500/600A) or a No.17 spanner (ACPC 400A).
5. There is no need to remove the bolts, as the fuse is pulled out of its housing as shown by the arrows (5).
6. Insert the new fuse as shown by the arrows (6).

⚠WARNING

WARNING: the washer must stay between the nut and the fuse (NOT under the fuse).

7. Tighten the two nuts with a No. 19 spanner (ACPC 500/600A) or a No. 17 spanner (ACPC 400A), to a torque of 12 Nm.
8. Put the cover back in place, pinning down the top part first (be careful to hook it on the tooth as shown in the figure).
9. Fix the cover in place, tightening the screw in its housing (1).

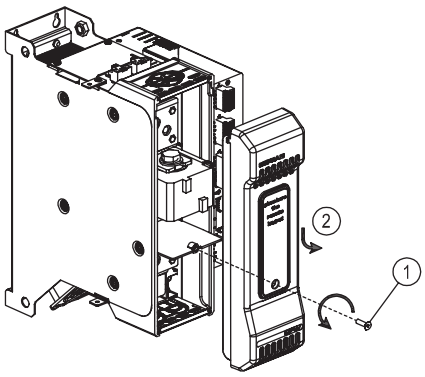

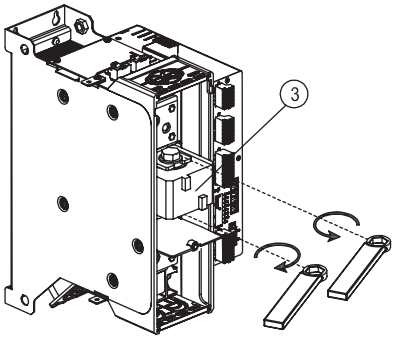

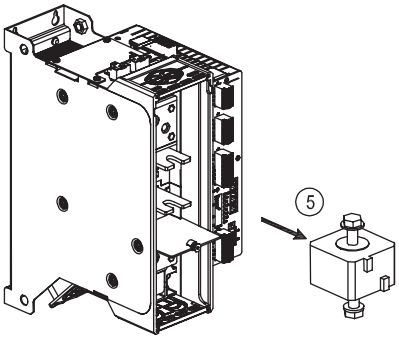

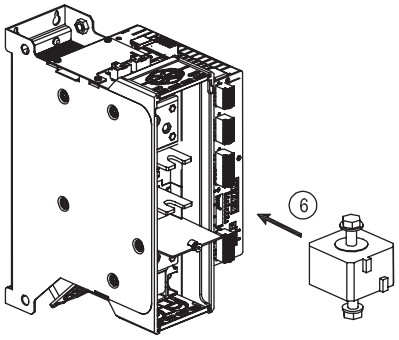

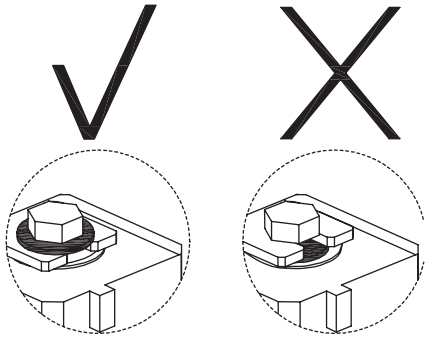

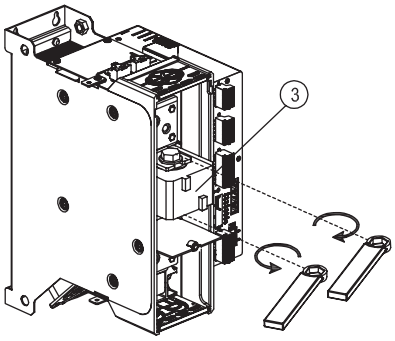

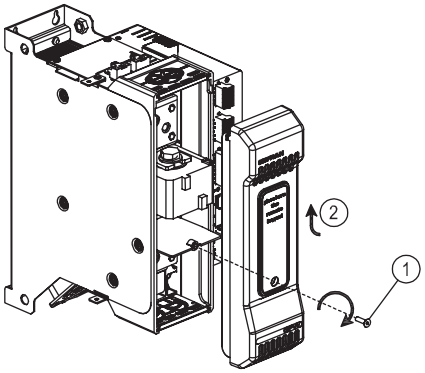

5.5 Card Insertion for Fieldbus Interface – 40 to 300 A Models

1. Undo the screws 16.
2. Turn slightly the points 18 using a screwdriver.
3. Remove the cover 17.
4. Place the interface card 19 in the connectors prepared on card 21.
5. Remove the pre-formed blanks parts 20 on cover 17 according to the type of interface installed.
6. Replace cover 17 in its seat.
7. Fasten the screws 16.

⚠WARNING

WARNING: Use ESD guards to avoid to damage the internal HW with electrostatic discharges.

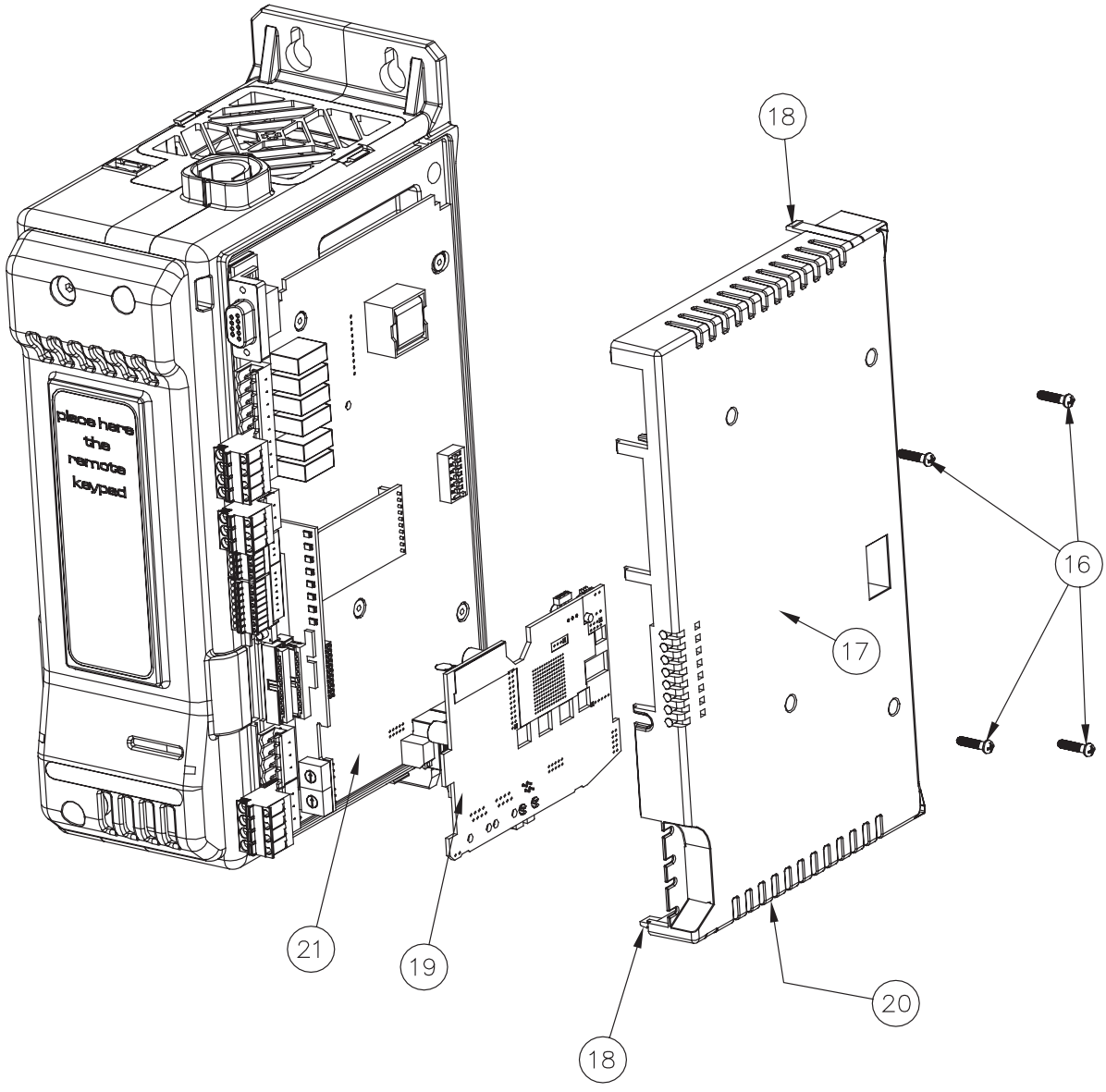

5.6 Card Insertion for Fieldbus Interface – 400 to 600 A Models

1. Slacken the screws (1) on the front piece and remove the front piece (2).
2. Slacken the screws (3) on the CPU cover and remove the cover (4).
3. Insert the Fieldbus interface card (5) in the connectors provided on the supporting card (6). Check that the card is inserted correctly.
4. Put the CPU cover (4) back in place and fix it in place by tightening the screws (3).
5. Use the new front piece (2) supplied with the Fieldbus card (or open the pre-fractured parts present on the product's original front piece) and fix it in place by tightening the screws (1).

⚠WARNING

WARNING: Use ESD guards to avoid to damage the internal HW with electrostatic discharges.

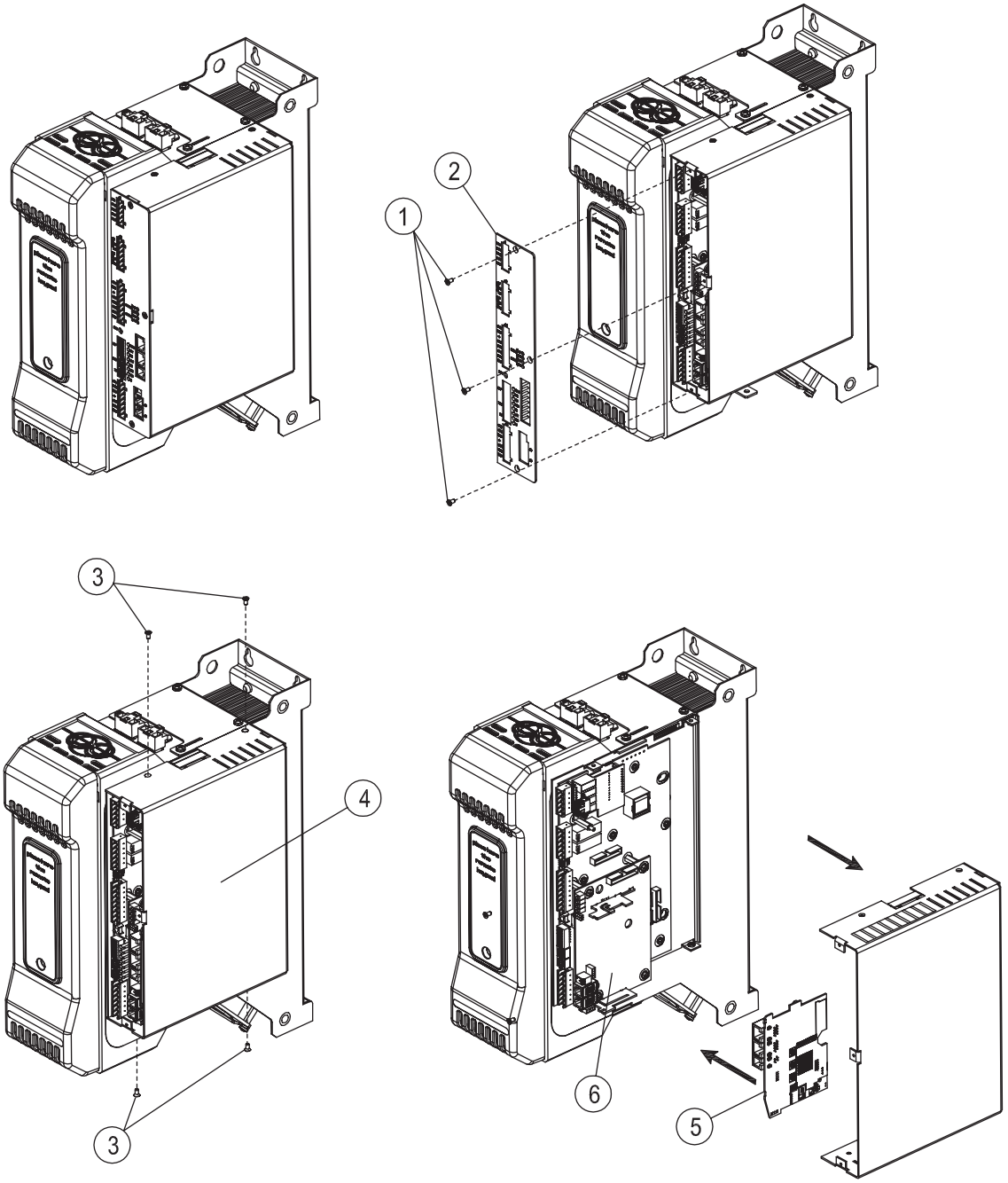

5.7 Connection of Expansion Modules (for 2-Phase or 3-Phase Configuration)

CARRY OUT THE FOLLOWING STEPS:

1. Remove the master module side cover by undoing the fastening screws
2. Connect the flat cables supplied with the expansions to CPU card by inserting them into the appropriate connectors.
3. Fix the side cover of the master with the specific screws
4. Remove the front cover of the expansion modules undoing the fastening screw of the cover and correctly install the master module and the expansion module to the panel as described at paragraph 2.4.
5. Fasten the screw to secure the product in position.
6. Connect the two flat cables from the CPU card by inserting them into the correct connector of expansion.
7. The cables flat already are inserted in the indicated connector of the expansion
8. Do not pull the flat cable to avoid to damage it.
9. Place the flat cable into the product and close the front cover of expansions.
10. Check the front covers are properly closed with the screws.

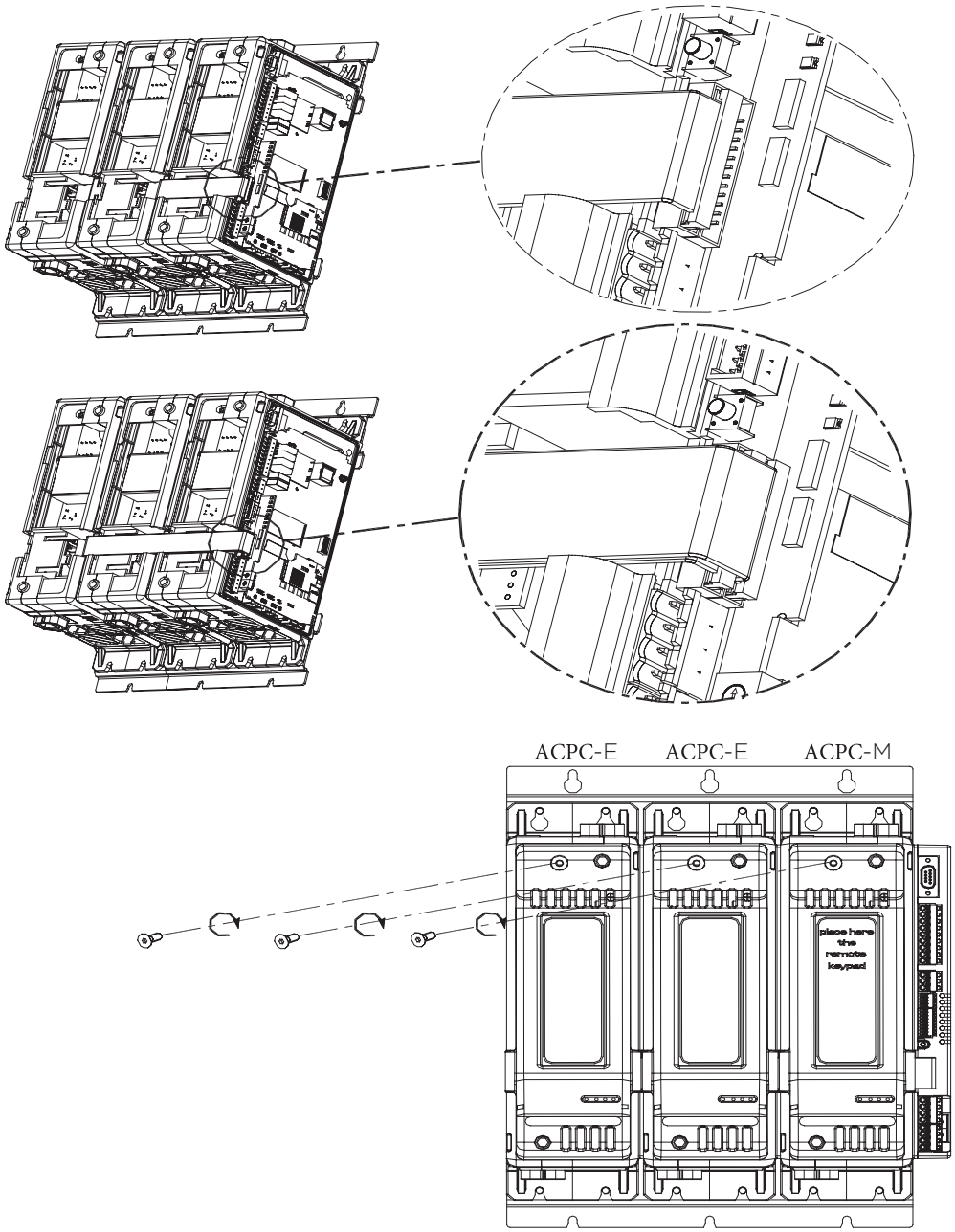

6. Connections and Indicators

40 to 300A Models

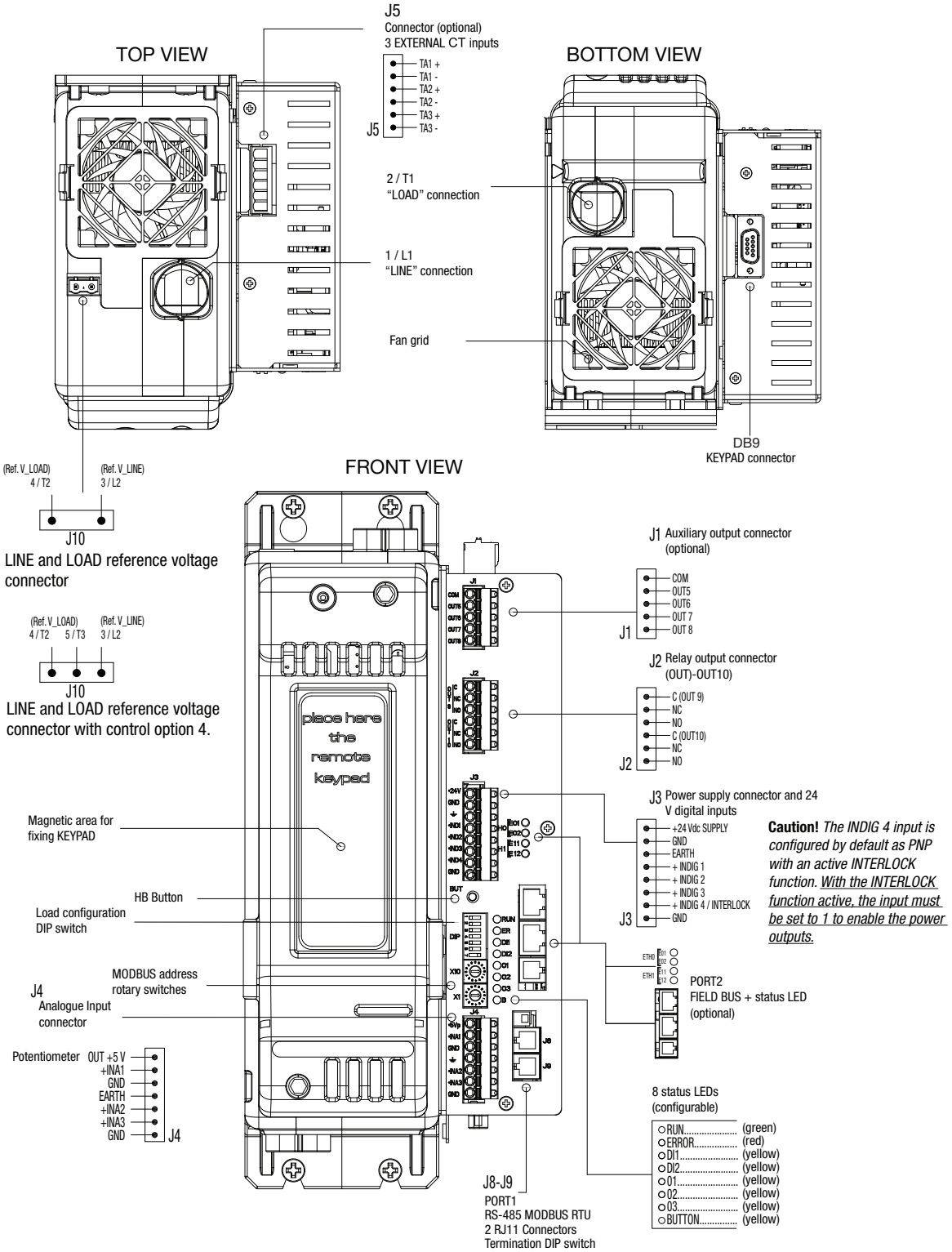

400 to 600A Models

Top View

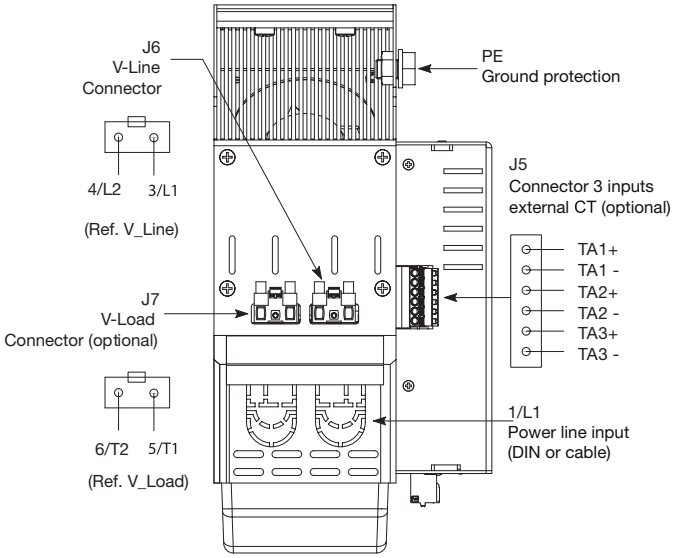

Bottom View

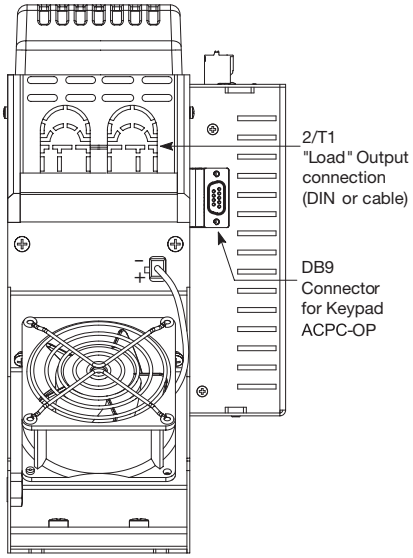

Front View

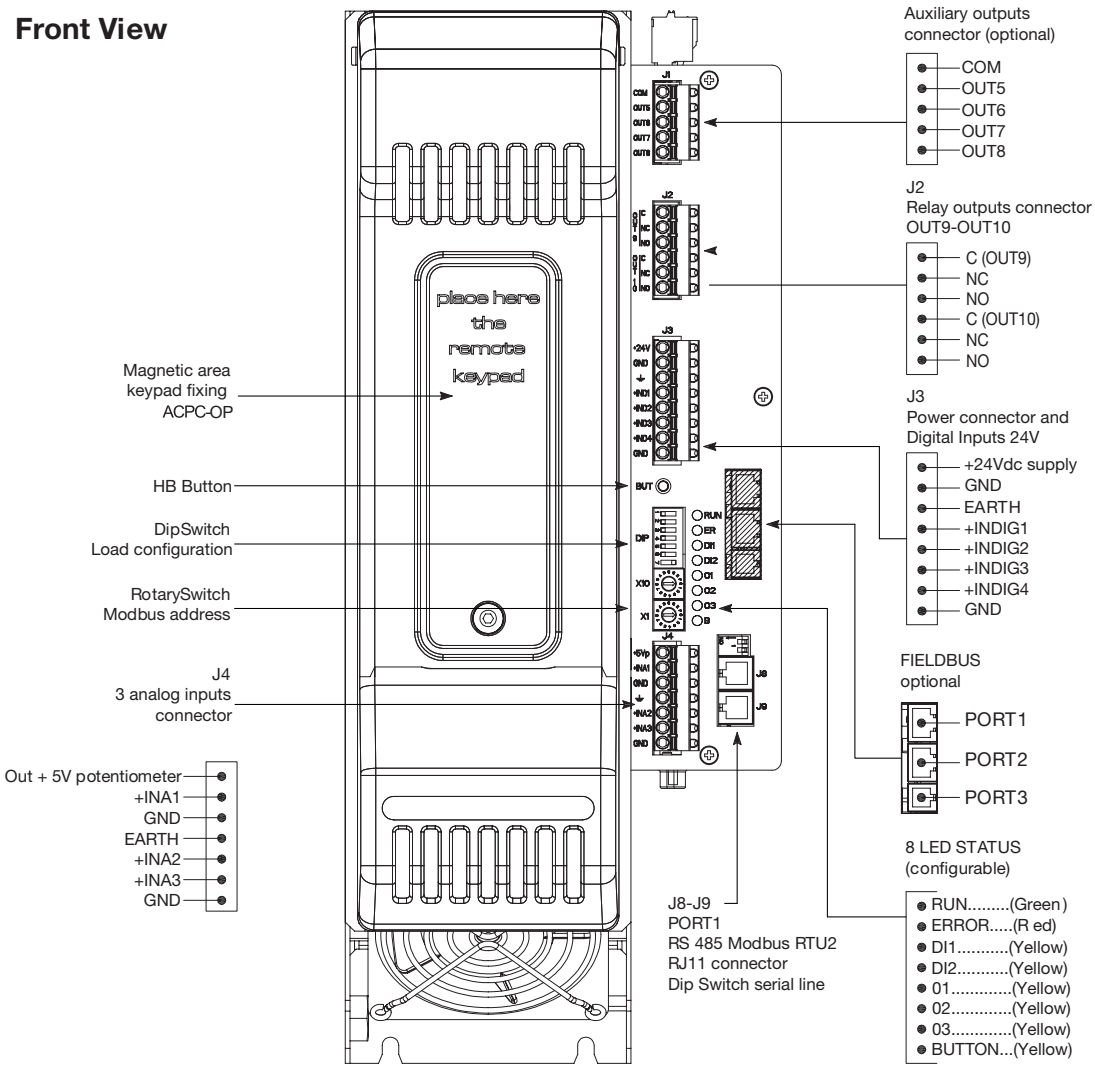

6.1 Inputs

J3 connector - Power supply and digital inputs.

The J3 connector includes the power input of the GPC controller and 4 digital inputs, configurable via software as NPN or PNP.
For permissible voltages and currents see the Technical Data.
Use cables with a cross-section of 0.25...2.5 mm2 (23-14 AWG) terminated with ferrules for connection.

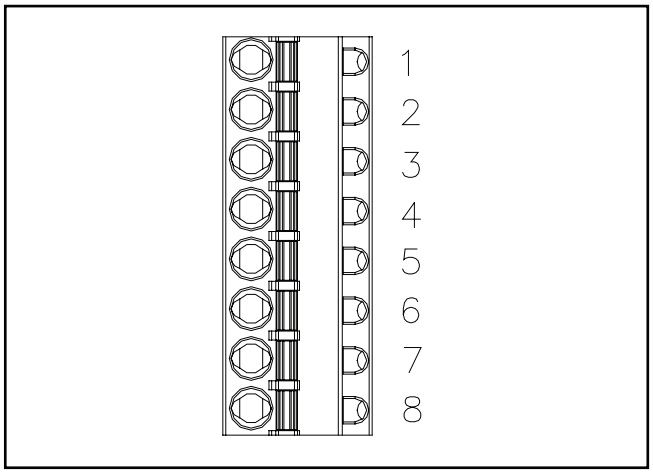

PIN	Name	Description
1	+24 Vdc	Power supply 24 Vdc
2	GND	
3	Earth	Earth EMC
4	+INDIG1	Digital input 1 configurable NPN / PNP
5	+INDIG2	Digital input 2 configurable NPN / PNP
6	+INDIG3	Digital input 3 configurable NPN / PNP
7	+INDIG4	Digital input 4 configurable NPN / PNP **Warning!** This input is configured by default as PNP with an active INTERLOCK function. With the INTERLOCK function active, the input must be set to 1 to enable the power outputs. The INTERLOCK function can be deactivated via software (see ACPC Configuration and Programming Manual).
8	GND	GND common

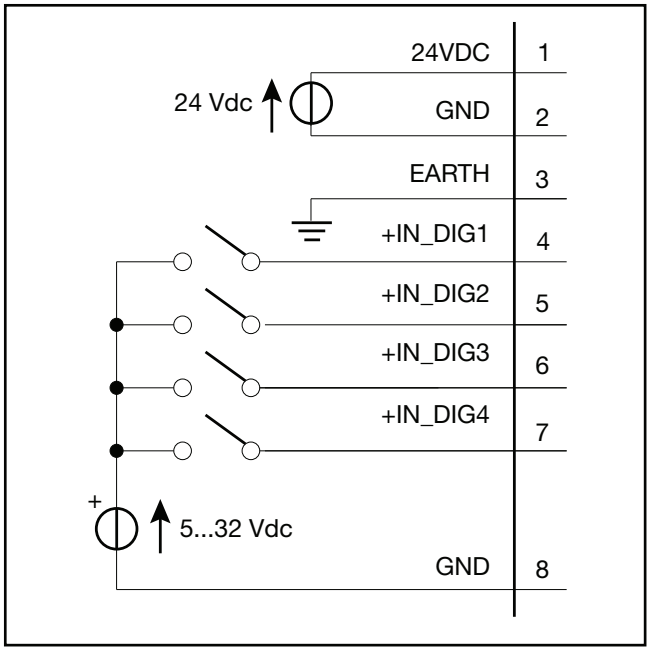

Power supply and PNP input connection diagram

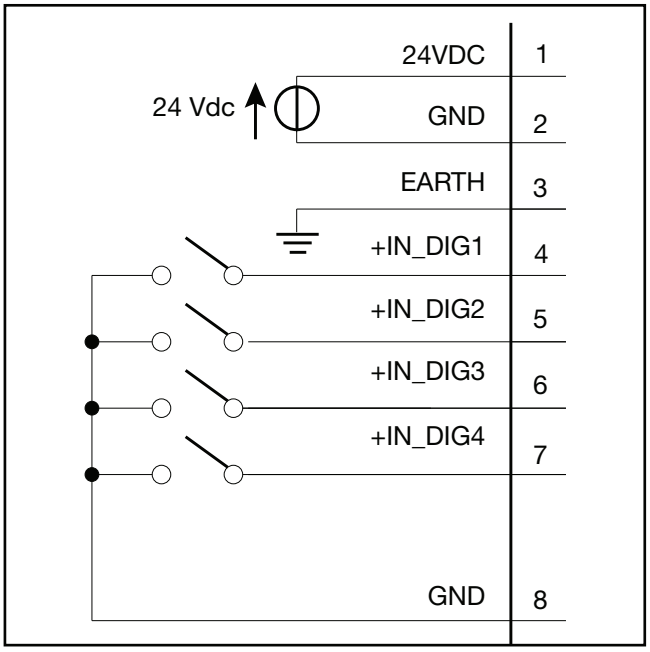

Power supply and NPN input connection diagram

J4 Connector - Analog control inputs

The J4 connector includes 3 analog inputs, configurable via software as:

- Voltage input 0...10 V
- Voltage input 0...5 V
- Potentiometer input
- Current input 0...20 mA
- Current input 4...20 mA

For technical specifications, see the Technical Data.
Use shielded cables with a cross-section of 0.25...2.5 mm2 (23-14 AWG) terminated with ferrules for connection.

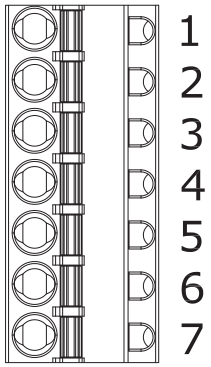

PIN	Name	Description
1	+5V_POT	5 V output for potentiometer power supply
2	+INA1	Analog command input INA1
3	GND	GND command signal
4	EARTH	Earth EMC
5	+INA2	Analog command input INA2
6	+INA3	Analog command input INA3
7	GND	GND command signal

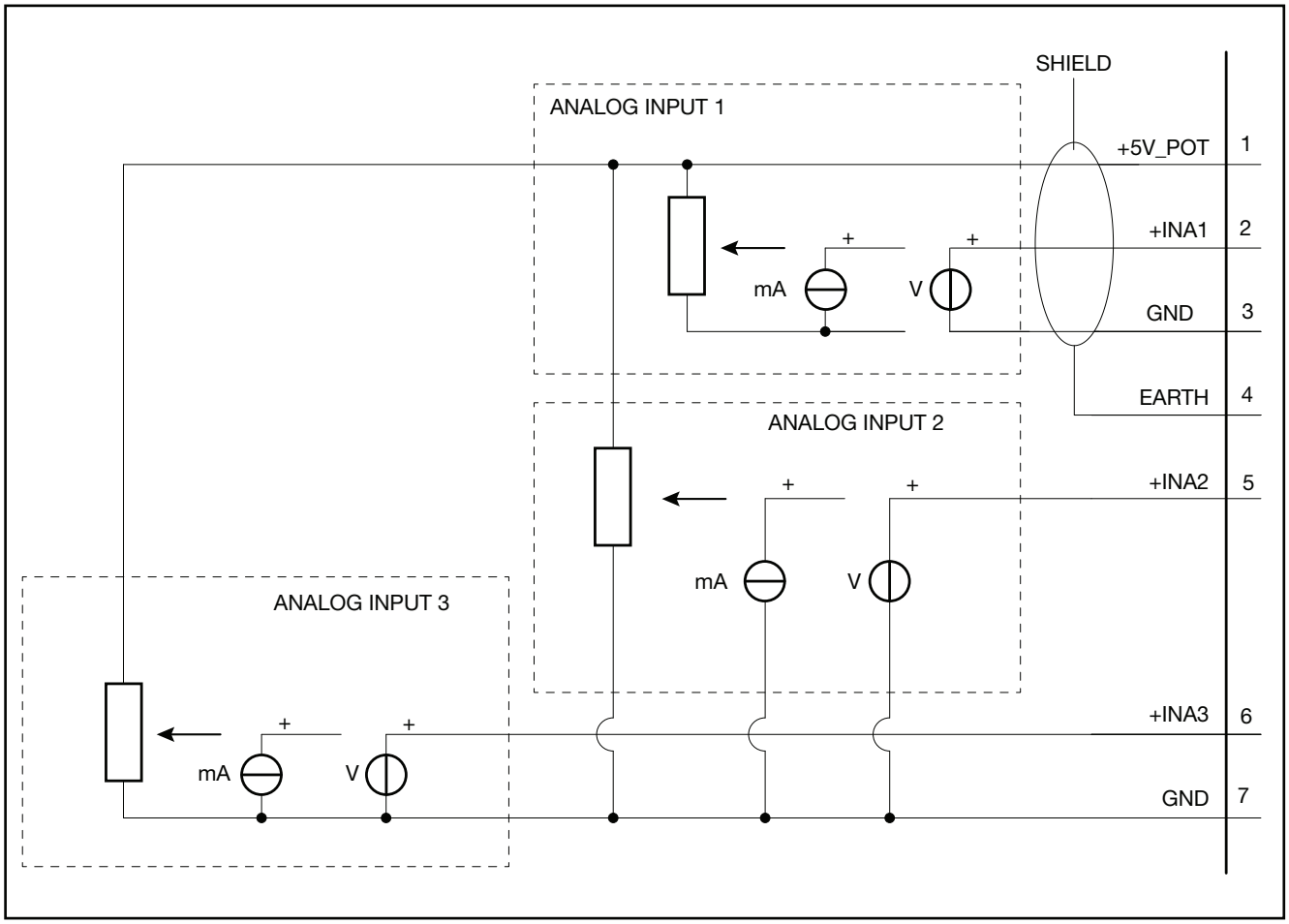

Analog input connection diagram

J5 connector - External CT inputs (optional)

The J5 connector is only present if the product is equipped with control option 4, which has 3 external CT inputs.
For technical specifications, see the Technical Data.
Use shielded cables with a cross-section of 0.25...2.5 mm2 (23-14 AWG) terminated with ferrules for connection.

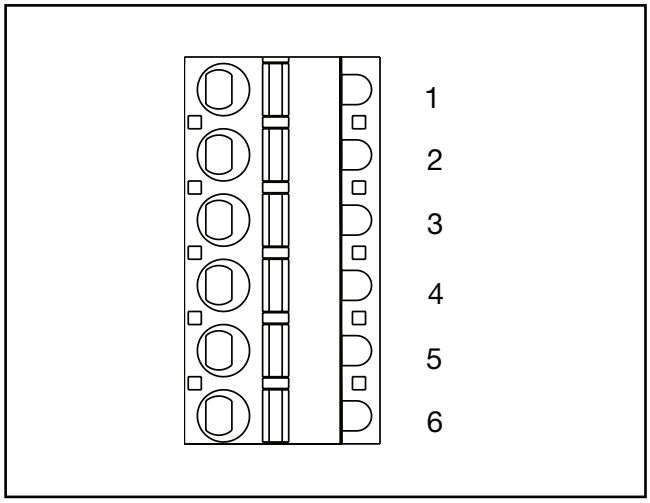

PIN	Name	Description
1	TA1+	TA1 external input (max 5 A rms)
2	TA1-	
3	TA2+	TA2 external input (max 5 A rms)
4	TA2-	
5	TA3+	TA3 external input (max 5 A rms)
6	TA3-	

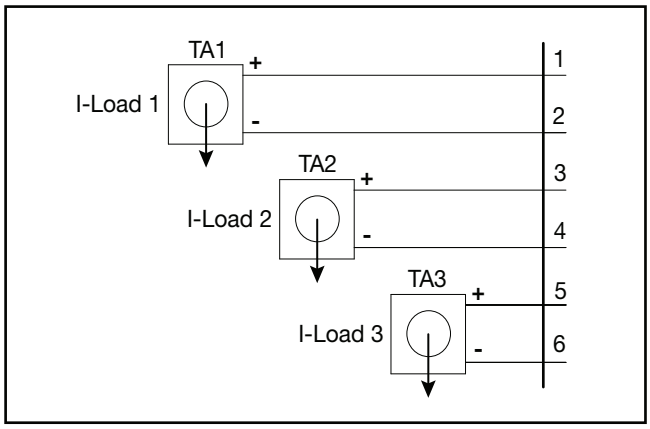

External CT input connection diagram

6.2 Outputs

J1 connector - outputs 5...8 (optional)

The J1 connector is only present if the product is equipped with the optional auxiliary outputs (O5...O8).
The available outputs can be relay type (R), digital type (D) or analogue type (W).
For technical specifications, see the Technical Data.
Use shielded cables with a cross-section of 0.25...2.5 mm2 (23-14 AWG) terminated with ferrules for connection. A shielded cable is recommended for analogue outputs (W).

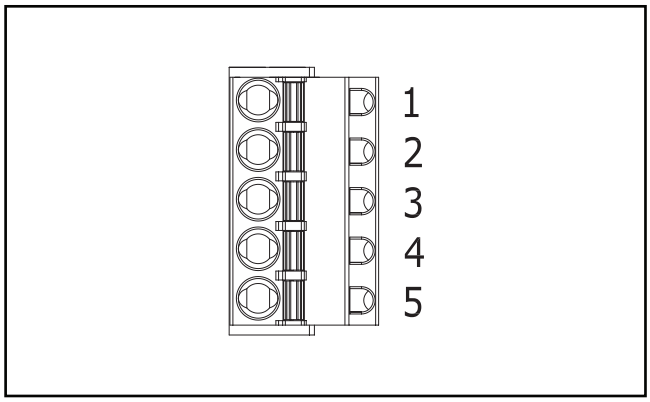

Optional D-type outputs (digital)

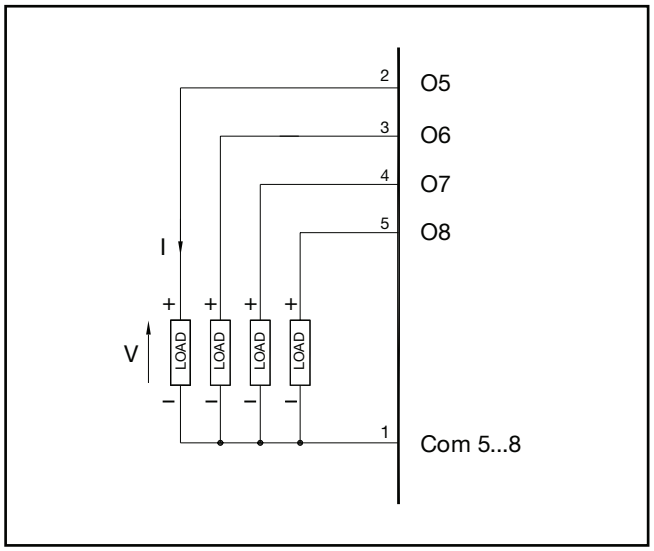

Digital output connection diagram

PIN	Name	Description
1	Com 5-8	Outputs common
2	O5	Output 5 (+)
3	O6	Output 6 (+)
4	O7	Output 7 (+)
5	O8	Output 8 (+)

Option D includes 4 digital high-side current-emitting outputs. The voltage levels range from 0 V to the product supply value.

Optional outputs type W (analog)

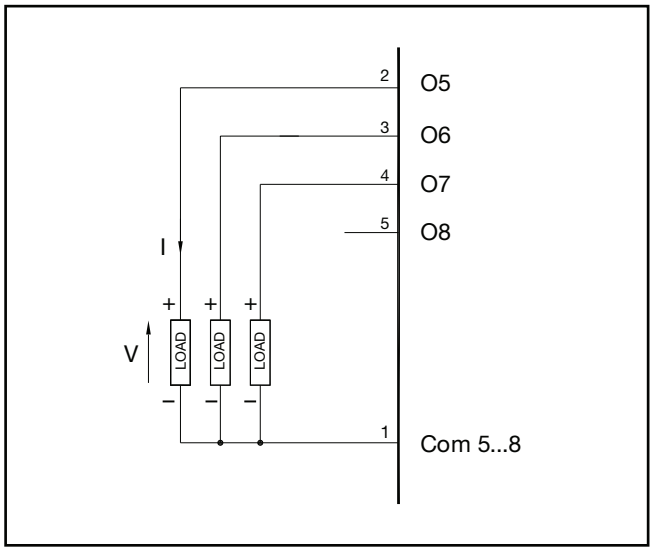

Analogue output connection diagram

PIN	Name	Description
1	Com 5-8	Common outputs
2	O5	Output 5 (+)
3	O6	Output 6 (+)
4	O7	Output 7 (+)
5	O8	Not used

Option W includes 3 analogue 12-bit outputs configurable via software in:

- Voltage 0...10 V
- Voltage 2...10 V
- Current 0…20 mA
- Current 4...20 mA (default)

Optional outputs type R (relays)

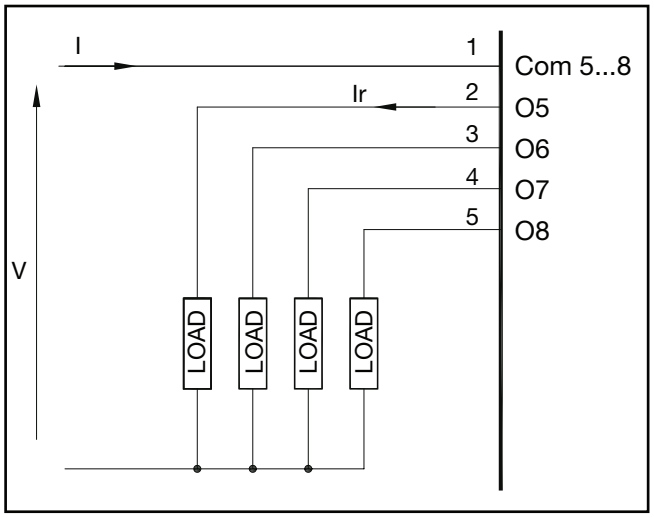

Relay output connection diagram

PIN	Name	Description
1	Com 5-8	Common outputs
2	O5	Output 5
3	O6	Output 6
4	O7	Output 7
5	O8	Output 8

Option R includes 4 NO relay outputs with a single common.

J2 connector - outputs 9 and 10 (relay type)

Outputs 9 and 10 are 2 relay outputs with changeover contact (C - NC - NO).
For technical specifications, see the Technical Data.
Use cables with a cross-section of 0.25...2.5 mm2 (23-14 AWG) terminated with ferrules for connection.

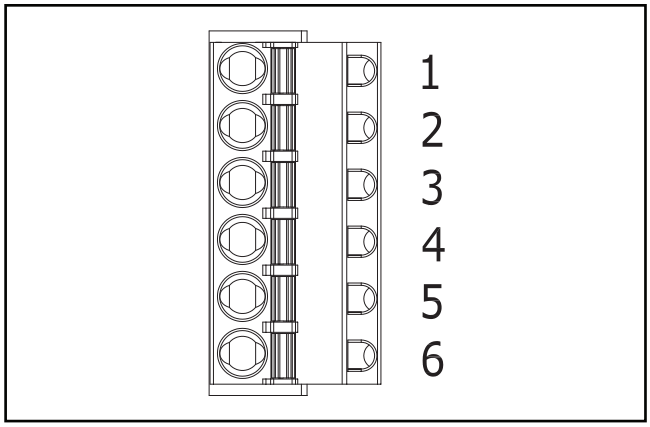

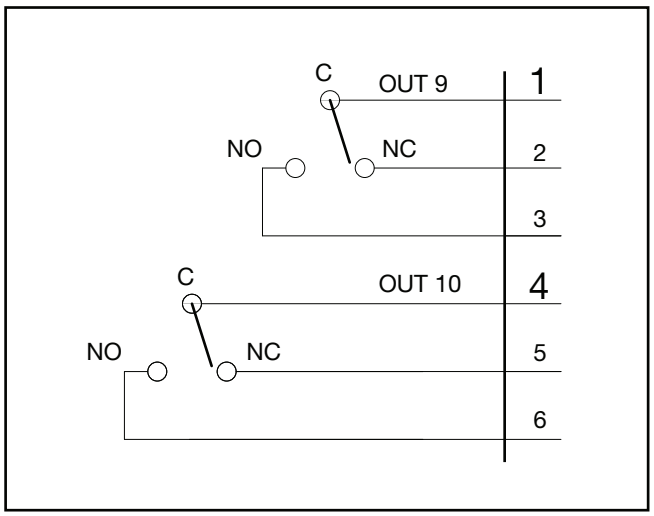

Outputs 9 and 10 connection diagram

PIN	Name	Description
1	C (Out 9)	Common contact of OUT9
2	NC (Out 9)	Normally closed contact of OUT9
3	NO (Out 9)	Normally open contact of OUT9
4	C (Out 10)	Common contact of OUT10
5	NC (Out 10)	Normally closed contact of OUT10
6	NO (Out 10)	Normally open contact of OUT10

7. Electrical Connections

Recommended Wire Gauges

Current Level	Terminal	Wire Gauge	Terminal Type	Tightening / Tool Torque
40A	1/L1, 2/T1	10 mm^2 7 AWG	Wire stripped for 25 mm or with crimped pre-insulated terminal tube CEMBRE PKC1018	5 Nm / Flat-head screwdriver tip 1 x 5.5 mm
60A	1/L1, 2/T1	16 mm^2 5 AWG	Wire stripped for 25 mm or with crimped pre-insulated terminal tube CEMBRE PKC1618	5 Nm / Flat-head screwdriver tip 1 x 5.5 mm
100A	1/L1, 2/T1	35 mm^2 2 AWG	Wire stripped for 25 mm or with crimped pre-insulated terminal tube CEMBRE PKC35025	5 Nm / Flat-head screwdriver tip 1 x 5.5 mm
150A	1/L1, 2/T1	70 mm^2 2/0 AWG	Wire stripped for 25 mm or with crimped pre-insulated terminal tube CEMBRE PKC70022	6 Nm / No. 6 hex head wrench
200A	1/L1, 2/T1	95 mm2 4/0 AWG	Wire stripped for 25 mm or with crimped pre-insulated terminal tube CEMBRE PKC95025	6 Nm / No. 6 hex head wrench
250A	1/L1, 2/T1	120 mm^2 250 AWG	Wire stripped for 25 mm	6 Nm / No. 6 hex head wrench
300A	1/L1, 2/T1	185 mm^2 350 KCMIL	Wire stripped for 25 mm	6 Nm / No. 6 hex head wrench
—	3/L2 (Ref. Vline) 4/T2 (Ref. Vload)	0.25 ...2.5 mm^2 23...14 AWG	Wire stripped for 8 mm or with tag terminal	0.5 ... 0.6 Nm / Flat-head screwdriver tip 0,6 x 3.5 mm

Note: Cables must be copper “Stranded Wire” or “Compact-Stranded Wire” type with maximum operating temperature 60/75°C

Functions of Indicator leds (40 to 300A)

LED	Description	Color
RN	Run - flashing during normal operation green	GREEN
ER	Error state: activates in case of error	Red
	Lo = the process variable value is < Lo.S	
	HI = the process variable value is > Hi.S	
	Sbr = interrupted sensor or input values over maximum limits	
	Err = Pt100 short circuit and input value below minimum limit	
DI1	State digital input 1	Yellow
DI2	State digital input 2	Yellow
O1	State output Out 1	Yellow
O2	State output Out 2, only with Expansion1 connected	Yellow
O3	State output Out 3, only with Expansion2 connected	Yellow
BUTTON	State HB key	Yellow

Recommended Wire Gauges

Current Level	Terminal	Type Rail/Selection	Terminal Type Cable /Rail	Tightening / Tool Torque
400A	1/L1, 2/T1	Single cable 300 mm^2 (600Kcmil)	Wire crimped at terminal tube Cembre A60-M12	N. 1 Bolt M12x25mm UNI 5739 hex head wrench n. 18 Pair: 50 Nm (**) (***)
400A	1/L1, 2/T1	Double cable 2x95 mm^2 (3/0 AWG)	Wire crimped at terminal tube Cembre A19-M10	N. 2 Bolts M10x25mm UNI 5739 hex head wrench n. 17 Pair: 40 Nm (***)
400A	1/L1, 2/T1	Double cable 2x95 mm^2 (3/0 AWG)	Wire stripped for 30mm inserted in ILSCO AU-350 lug (Accessory)	N. 1 Bolt M12x25mm UNI 5739 hex head wrench n. 18 Pair: 50 Nm (*) see note
400A	1/L1, 2/T1	Copper rail W = 40 32 24 mm H = 2 2 3 mm	Insulated copper rail with terminal non-insulated for L=60-65mm max	N. 1 Bolt M12x25mm UNI 5739 hex head wrench n. 18 Pair: 50 Nm
400A	PE	Cable 95 mm^2 (3/0 AWG)	Wire crimped at terminal tube Cembre A19-M10	N. 1 Bolt M10x20mm UNI 5739 hex head wrench n. 17 Pair: 40 Nm (***)
500A	1/L1, 2/T1	Double cable 2x120 mm^2 (250 Kcmil)"	Wire crimped at terminal tube Cembre A24-M10	N. 2 Bolts M10x25 mm UNI 5739 hex head wrench n. 17 Pair: 40 Nm
500A	1/L1, 2/T1	Double cable 2x120 mm^2 (250 Kcmil)"	Wire stripped for 30mm inserted in ILSCO AU-350 lug (Accessory)	N.1 Bolt M12x25 mm UNI 5739 hex head wrench n. 18 Pair: 50 Nm (*)
500A	1/L1, 2/T1	Copper rail W = 40 32 24 mm H = 3 4 5 mm	Insulated copper rail with terminal non-insulated for L= 60-65 mm max	N. 1 Bolt M12x25 mm UNI 5739 hex head wrench n. 18 Pair: 50 Nm
500A	PE	Cable 120 mm^2 (250 Kcmil)	Wire crimped at terminal tube Cembre A24-M10	N. 1 Bolt M10x20 mm UNI 5739 Chiave esagonale n. 17 Pair: 40 Nm
600A	1/L1, 2/T1	Double cable 2x185mm^2 (350 Kcmil)	Wire crimped at terminal tube Cembre A37-M10	N. 2 Bolts M10x25mm UNI 5739 hex head wrench n. 17 Pair: 40 Nm (***)
600A	1/L1, 2/T1	Double cable 2x185mm^2 (350 Kcmil)	Wire stripped for 30mm inserted in ILSCO AU-350 lug (Accessory)	N.1 Bolt M12x25mm UNI 5739 hex head wrench n. 18 Pair: 50 Nm (*) see note
600A	1/L1, 2/T1	Copper rail W = 50 40 32 mm H = 4 4 5 mm	Insulated copper rail with terminal non-insulated for L=60-65mm max	N.1 Bolt M12x25mm UNI 5739 hex head wrench n. 18 Pair: 50 Nm
600A	PE	Cable 185mm^2 (350 Kcmil)	Wire crimped at terminal tube Cembre A37-M10	N. 1 Bolt M10x20mm UNI 5739 hex head wrench n. 17 Pair: 40 Nm (***)
400/500/600A	J6, J7	0.25 … 2.5mm^2 cable 23 …14 AWG	Cable peeled for 8mm or with a tag terminal	0.6 …0.6 Nm / 0.6 x 3.5mm slotted screwdriver

(*) NOTE: Wires on the ILSCO accessory must be tightened with a hex head wrench n. 8. Torque: 30 Nm.
(**) **NOTE:** Use the IP20 grid of ILSCO accessory code F067432.
(***) NOTE: use only UL cable terminals with their stapler

LED State

LED status refers to the corresponding parameter, with the following special cases:

- LED RN (green) on: hotkey functionality
- LED RN (green) + LED ER (red) both flashing rapidly: autobaud in progress
- LED ER (red) on: error in one of main inputs (Lo, Hi, Err, Sbr)
- LED ER (red) flashing: temperature alarm ((OVER_HEAT or TEMPERATURE_SENSOR_BROKEN) or alarm of SHORT_CIRCUIT_CURRENT or SSR_SAFETY or FUSE_OPEN (only for single phase configuration).
- LED ER (red) + LED Ox (yellow) both flashing: HB alarm or POWER_FAIL in zone x
- All LEDs flashing rapidly: ROTATION123 alarm (only for three phase configuration)
- All LEDs flashing rapidly except LED DI1: jumper configuration not provided
- All LEDs flashing rapidly except LED DI2: 30%_UNBALANCED_ERROR alarm (only for three phase configuration)
- All LEDs flashing rapidly except LED O1: SHORT_CIRCUIT_CURRENT alarm (only for three phase configuration)
- All LEDs flashing rapidly except LED O2: TRIPHASE_MISSING_LINE_ERROR alarm (only for three phase configuration)
- All LEDs flashing rapidly except LED O3: SSR_SAFETY alarm (only for three phase configuration)
- All LEDs flashing rapidly except LED BUTTON: FUSE_OPEN alarm (only for three phase configuration)

Description of Rotary Switches

Switch	Description
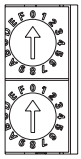 **x10** **x1**	Defines address of module 00...99 (in case of ACPC compatible mode (dip switch 7= ON), this address is attributed to the ACPC Master module; the expansions, if present, will have address +1 (ACPC Expanasion Slot 1) and address +2 (ACPC Expansion Slot 2)) Hexadecimal combinations are reserved.

7.1 Description of Dip-Switches (40 to 300A)

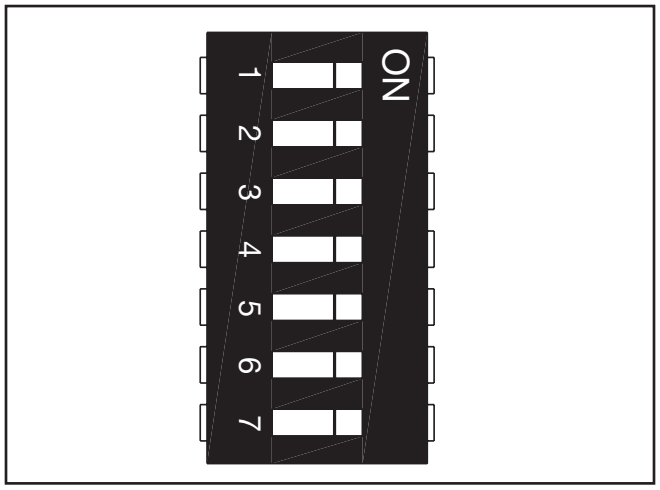

Dip Switches	Description
1	Connection type: (see table)
2	Connection type: (see table)
3	Connection type: (see table)
4	Connection type: (see table)
5	OFF = resistive load ON = inductive load (transformer primary control)
6	ON = reset factory configuration
7	ON = Chromalox simulation function

Recommended Wire Gauges

						Request Modules		
				OFF: resistive load ON :inductive load (transformer primary control)		ACPC Master	ACPC Expansion Slot 1	ACPC Expansion Slot 2
Dip 1	**Dip 2**	**Dip 3**	**Dip 4**	**Dip 5**	**Connection Type**			
OFF	OFF	OFF	OFF	OFF/ON	Three Single-phase load	x	(*)	(*)
OFF	ON	OFF	OFF	OFF/ON	Three Independent single-phase load in open delta	x	x	x
ON	ON	OFF	OFF	OFF/ON	3-phase load open delta/star load with neutral	x	x	x
ON	ON	ON	OFF	OFF/ON	3-phase load closed delta	x	x	x
ON	OFF	OFF	ON	OFF/ON	3-phase star load without neutral	x	x	x
ON	OFF	OFF	OFF	OFF/ON	3-phase star load without neutral with 2-phase command	x	x	
ON	OFF	ON	OFF	OFF/ON	3-phase load closed delta with 2-phase command	x	x	

(*) NOTE: Wires on the ILSCO accessory must be tightened with a hex head wrench n. 8. Torque: 30 Nm.

⚠CAUTION

After setting the required dip-switch configuration, run the following parameter initialization procedure once:

1. Check the correct setting of dips 1-2-3-4-5.
2. Set dip 6 to “on” (factory configuration).
3. Power the device with 24 VDC.
4. Wait for correct and regular flashing of the green run LED.
5. Set dip 6 to “off”.
6. The device is correctly configured.

7.2 Serial Communication Ports

Location of the ports

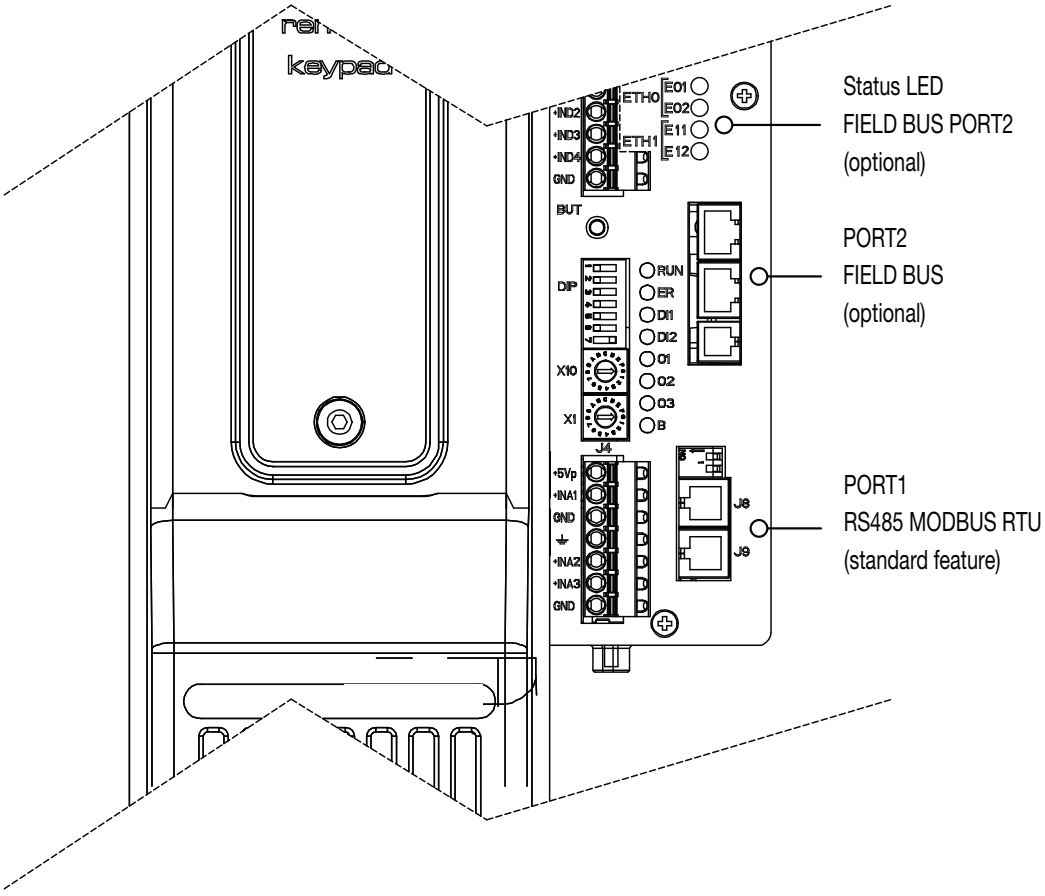

Port1 (local bus): Connectors J8, J9 MODBUS RTU/MODBUS RTU

Connector J8/J9 RJ10 4-4 pin	Nr. Pin	Name	Description	Note
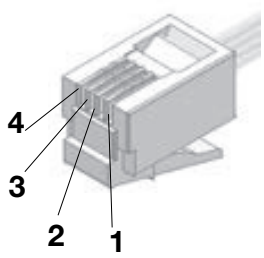	1	GND1 (**)		(*) Insert the RS485 line termination in the last device on the Modbus line, see dip-switches. (**) Connect the GND signal between Modbus devices with a line distance > 100 m.
	2	Tx/Rx+	Data reception/transmission (A+)	
	3	Tx/Rx+	Data reception/transmission (B-)	
	4	+V (reserved)		
Cable type: flat telephone cable for pin 4-4 conductor 28 AWG				

Port2 (fieldbus): Connectors S4, S5 MODBUS RTU/MODBUS RTU

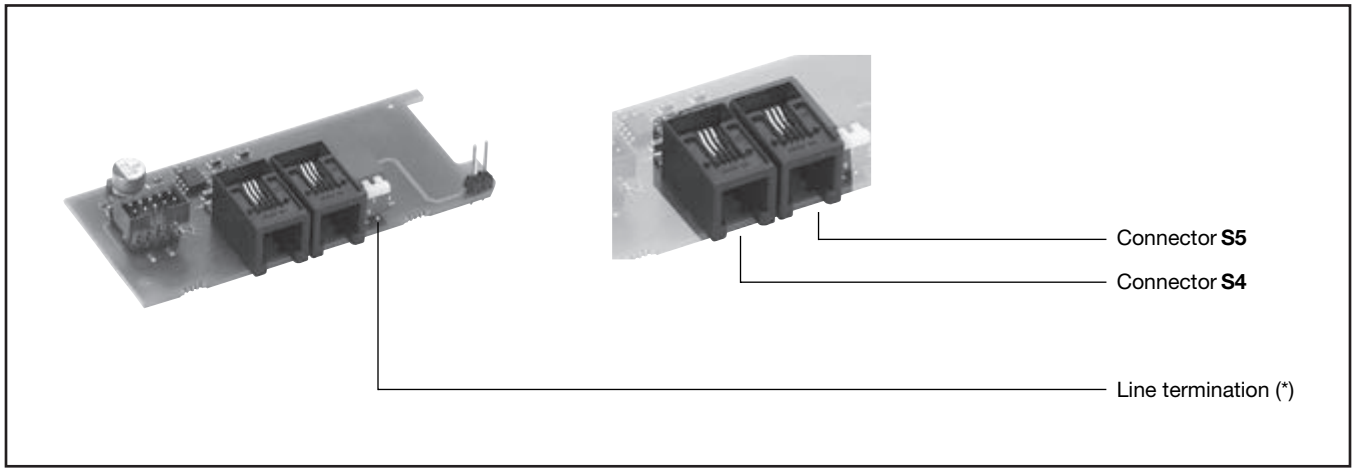

Connector S4/S5 RJ10 4-4 pin	Nr. Pin	Name	Description	Note
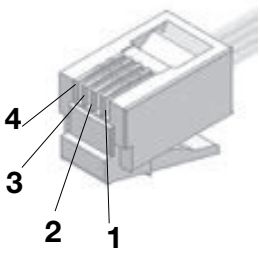	1	GND1 (**)		(*) Insert the RS485 line termination in the last device on the Modbus line, see dip-switches. (**) Connect the GND signal between Modbus devices with a line distance > 100 m.
	2	Tx/Rx+	Data reception/transmission (A+)	
	3	Tx/Rx+	Data reception/transmission (B-)	
	4	+V (reserved)		
Cable type: flat telephone cable for pin 4-4 conductor 28 AWG				

Port2 (fieldbus): Connectors S4, S5 MODBUS RTU/Profibus DP

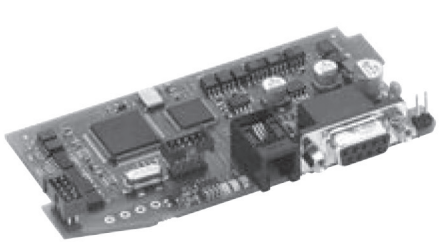

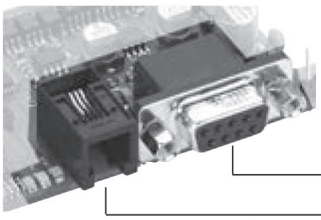

S5 female connector

S4 female connector

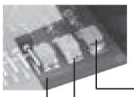

Yellow Led

Red Led

Green Led

Connector S4 RJ10 4-4 pin	Nr. Pin	Name	Description	Note
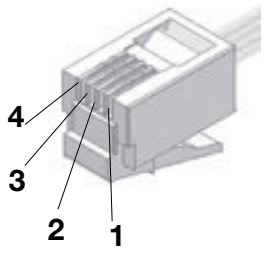	1	GND1 (**)		(**) Connect the GND signal between Modbus devices with a line distance > 100 m.
	2	Rx/Tx+	Data reception/transmission (A+)	
	3	Rx/Tx-	Data reception/transmission (B-)	
	4	+V (reserved)		
Cable type: flat telephone cable for pin 4-4 conductor 28 AWG				

Connector S5 D-SUB 9 Pins Male	Nr. Pin	Name	Description	Note
 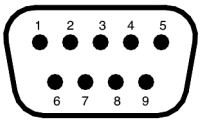	1	SHIELD	EMC Protection	Connect the terminal resistances as shown in the figure. 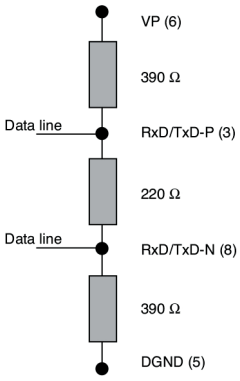
	2	M24V	Output voltage - 24V	
	3	RxD/TxD-P	Data reception/transmission	
	4	n.c.	n.c.	
	5	DGND	Data Ground	
	6	VP	Positive power supply +5V	
	7	P24V	Output voltage +24V	
	8	RxD/TxD-N	Data reception/transmission	
	9	n.c.	n.c.	
Cable type: flat telephone cable for pin 4-4 conductor 28 AWG				

Port2 (fieldbus): Connectors S4, S5 MODBUS RTU/CANopen

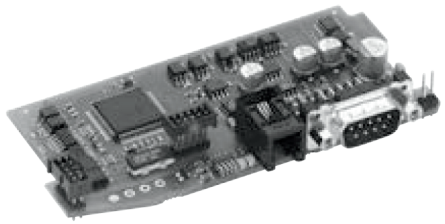

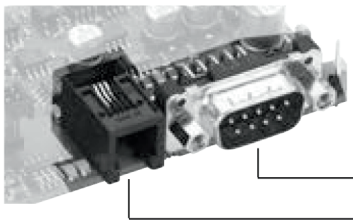

S5 male connector

S4 female connector



Red Led

Green Led

Connector S4 RJ10 4-4 pin	Nr. Pin	Name	Description	Note
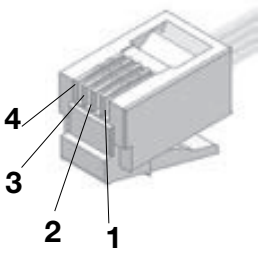	1	GND1 (**)		(**) Connect the GND signal between Modbus devices with a line distance > 100 m.
	2	Rx/Tx+	Data reception/transmission (A+)	
	3	Rx/Tx-	Data reception/transmission (B-)	
	4	+V (reserved)		
Cable type: flat telephone cable for pin 4-4 conductor 28 AWG				

Connector S5 D-SUB 9 Pins Female	Nr. Pin	Name	Description	Note
 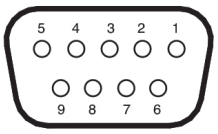	1	--	Reserved	Connect the terminal resistances as shown in the figure. 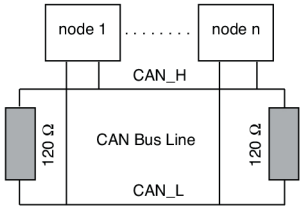
	2	CAN_L	CAN_L bus line (domination low)	
	3	RxD/TxD-P	CAN Ground	
	4	--	Reserved	
	5	(CAN_SHLD)	Optional CAN Shield	
	6	(GND)	Optional Ground	
	7	CAN_H	CAN_H bus line (domination high)	
	8	--	Reserved	
	9	(CAN_V+)	Optional CAN external positive supply (dedicated for supply of transceiver and optocouplers, if galvanic isolation of the bus node applies)	
Cable type: flat telephone cable for pin 4-4 conductor 28 AWG				

Port2 (fieldbus): Connectors S4, S5 MODBUS RTU/Ethernet Modbus TCP

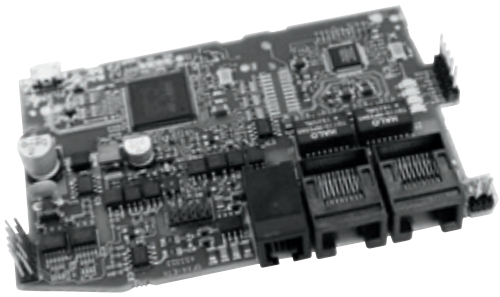

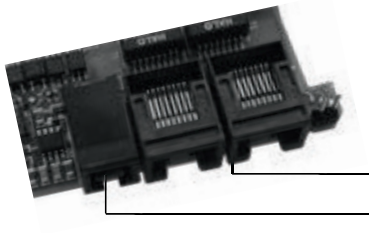

S5 female connector

S4 female connector

Connector S4 RJ10 4-4 pin	Nr. Pin	Name	Description	Note
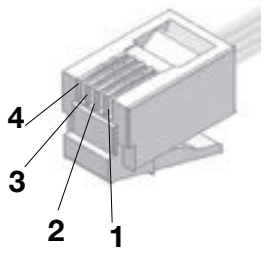	1	GND1 (**)		(**) Connect the GND signal between Modbus devices with a line distance > 100 m.
	2	Rx/Tx+	Data reception/transmission (A+)	
	3	Rx/Tx-	Data reception/transmission (B-)	
	4	+V (reserved)		
Cable type: flat telephone cable for pin 4-4 conductor 28 AWG				

Connector S5 RJ45	Nr. Pin	Name	Description	Note
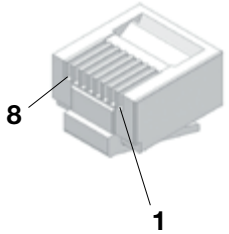	1	TX+	Data + Transmission	
	2	TX-	Data - Transmission	
	3	RX+	Data + Reception	
	4	n.c.		
	5	n.c.		
	6	RX-	Data - Reception	
	7	n.c.		
	8	n.c.		
Cable type: Use standard category 6 cable according to TIA/EIA-568A				

Port2 (fieldbus): connectors S4, S5

Port only present on ACPC controllers with the following options:

- Fieldbus Port 2 = E6 for Modbus RTU / **Profinet** serial interface.
- Fieldbus Port 2 = E7 for Modbus RTU / **EtherCAT** serial interface.
- Fieldbus Port 2 = E8 for Modbus RTU / **Ethernet IP** serial interface.

S4 and S5 connectors and status LEDs on CPU front panel.

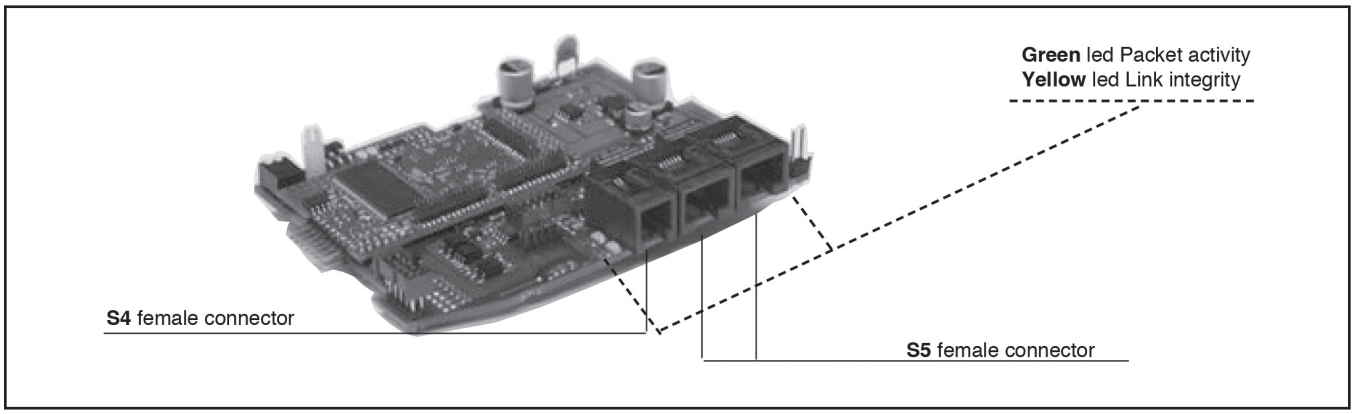

Connector S4 RJ10 4-4 pin	Nr. Pin	Name	Description	Note
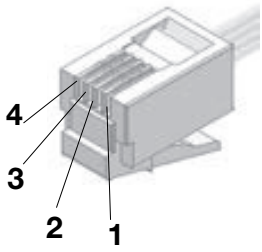	1	GND1 (**)		(**) Connect the GND signal between Modbus devices with a line distance > 100 m.
	2	Rx/Tx+	Data reception/transmission (A+)	
	3	Rx/Tx-	Data reception/transmission (B-)	
	4	+V (reserved)		
Cable type: flat telephone cable for pin 4-4 conductor 28 AWG				

Connector S5 RJ45	Nr. Pin	Name	Description	Note
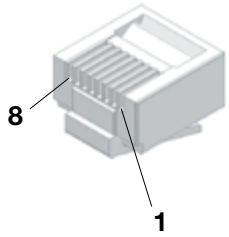	1	TX+	Data + Transmission	
	2	TX-	Data - Transmission	
	3	RX+	Data + Reception	
	4	n.c.		
	5	n.c.		
	6	RX-	Data - Reception	
	7	n.c.		
	8	n.c.		
Cable type: Use standard category 6 cable according to TIA/EIA-568A				

7.3 Connection Example: Power Section (40 to 300A)

ACPC Connection Example for 1 Single-Phase Load

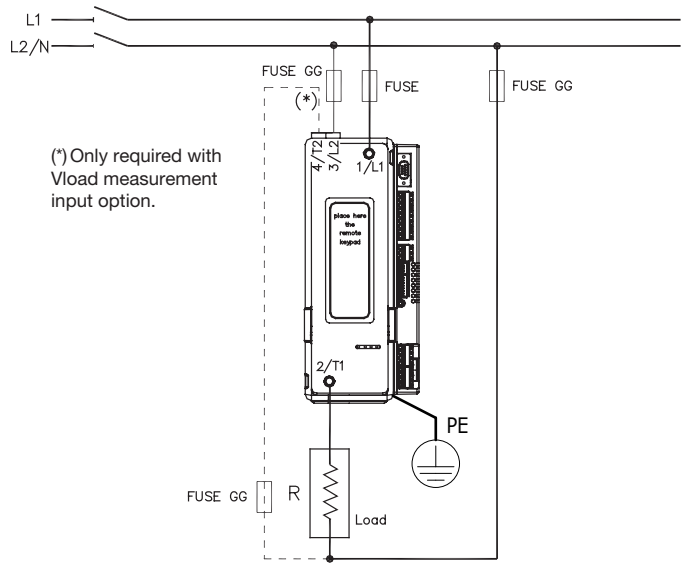

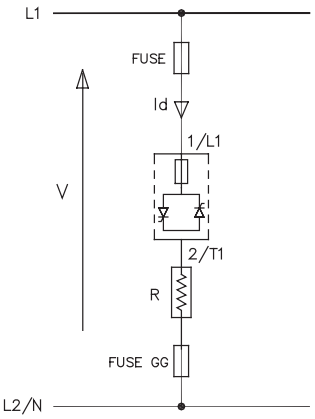

$$Id = \frac{P}{V \cos\varphi}$$

ACPC Master - Dip-Switches Configuration				
Dip 1	Dip 2	Dip 3	Dip 4	Dip 5
OFF	OFF	OFF	OFF	OFF

- FIRING MODE: ZC, BF, HSC, PA
- HB DIAGNOSTIC AVAILABLE: Partial and total load failure

FAST FUSE: needed only for controller with option Fuse = 0

GG Fuse: See Fuse section

V= phase voltage (line - neutral)
P = power of each single-phase load
Id = load current

if resistive load cos =1

ACPC Connection Example for 1 Single-Phase Transformer Load

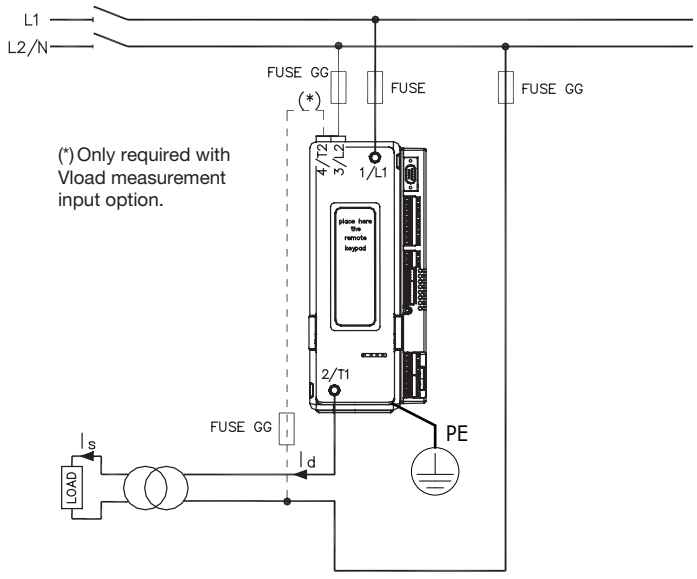

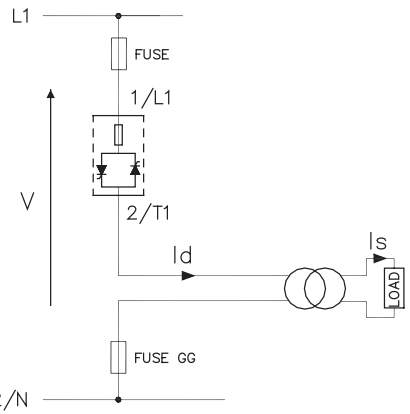

$$Id = \frac{P}{\eta V \cos\varphi} \qquad Is = \frac{P}{V_{load} \cos\varphi}$$

ACPC Master - Dip-Switches Configuration				
Dip 1	Dip 2	Dip 3	Dip 4	Dip 5
OFF	OFF	OFF	OFF	ON

- FIRING MODE: ZC, PA, BF(bF.Cy≥2)
- HB DIAGNOSTIC AVAILABLE: Partial and total load failure

FAST FUSE:
needed only for controller with option Fuse = 0

GG Fuse: See Fuse section

V = phase voltage (line L1- line L2/N)
P = power of each single-phase load
Vload = voltage on secondary (load)
Id = current in primary
Is = current in secondary
η= transformer output (typical 0,9)

if resistive load cos =1

ACPC 3-Phase, 2-Leg Connection for a 3-Phase Star Load without Neutral

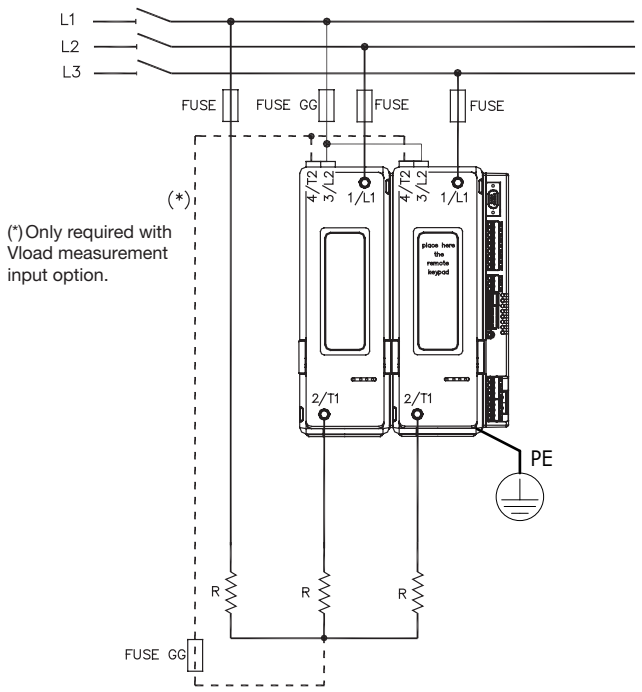

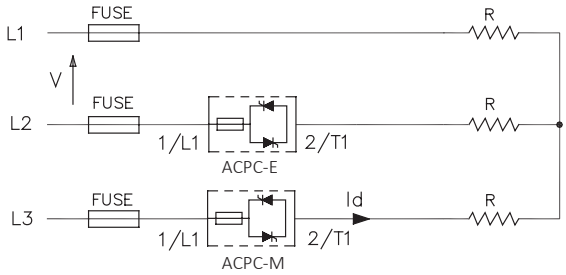

$$Id = \frac{P}{\sqrt{3}\ V\ \cos\varphi}$$

ACPC Master - Dip-Switches Configuration				
Dip 1	Dip 2	Dip 3	Dip 4	Dip 5
ON	OFF	OFF	OFF	OFF

- FIRING MODE: ZC, BF
- HB DIAGNOSTIC AVAILABLE: Total load failure

FAST FUSE: needed only for controller with option Fuse = 0

GG Fuse: See Fuse section

V = line voltage
P = total power
Id = load current
if resistive load cos =1

ACPC 3-Phase, 2-Leg connection for a 3-Phase Star Load without Neutral with Transformer

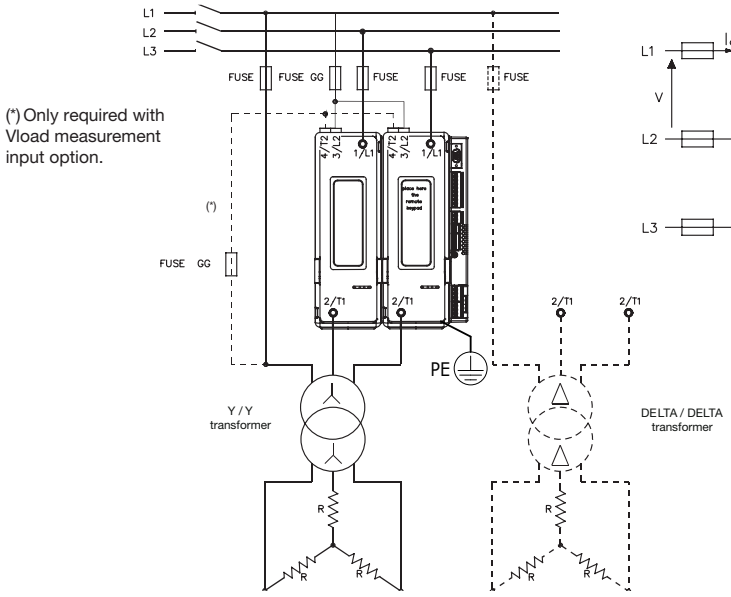

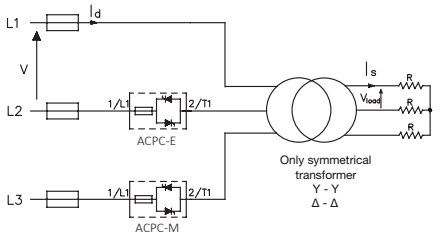

$$Id = \frac{P}{\eta\sqrt{3}\ V\ \cos\varphi} \qquad Is = \frac{}{\sqrt{3}\ \backslash}$$

ACPC Master - Dip-Switch Configuration				
Dip 1	Dip 2	Dip 3	Dip 4	Dip 5
ON	OFF	ON	OFF	OFF

- FIRING MODE: ZC, BF
- HB DIAGNOSTIC AVAILABLE: Total load failure

FAST FUSE: needed only for controller with option Fuse = 0
GG Fuse: See Fuse section

V = phase voltage (line L1- line L2/N)
P = total power
Vload = voltage on secondary (load)
Id = current in primary
Is = current in secondary
η= transformer output (typical 0,9)
if resistive load cos =1

ACPC 3-Phase, 2-Leg Connection for a 3-Phase Closed Delta Load

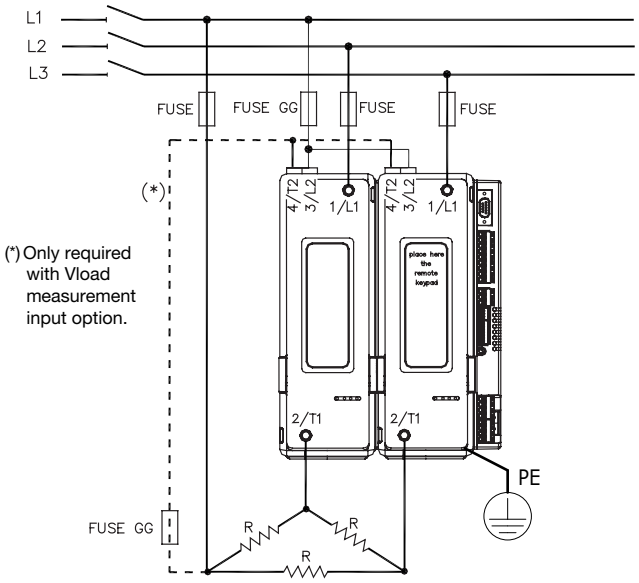

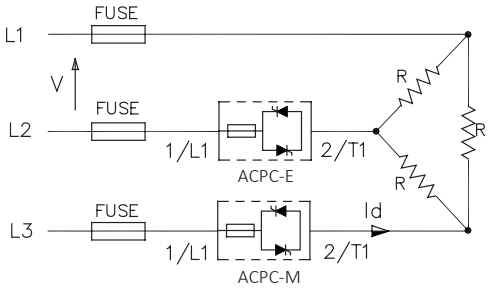

$$Id = \frac{P}{\sqrt{3}\ V\ \cos\varphi}$$

ACPC Master - Dip-Switch Configuration				
Dip 1	Dip 2	Dip 3	Dip 4	Dip 5
ON	OFF	ON	OFF	OFF

- FIRING MODE: ZC, BF
- HB DIAGNOSTIC AVAILABLE: Partial and total load failure

FAST FUSE: needed only for controller with option Fuse = 0

GG Fuse: See Fuse section

V = line voltage
P = total power
Id = load current

if resistive load cos =1

ACPC 3-Phase, 2-Leg connection for a 3-Phase Closed Delta Load with Transformer

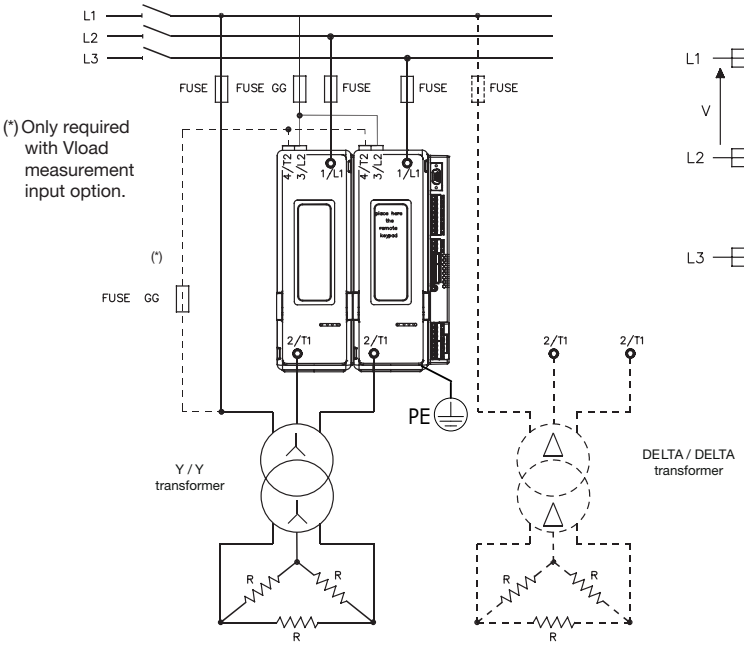

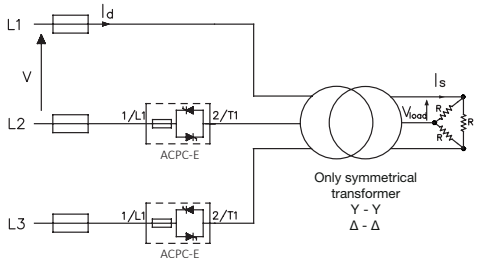

$$Id = \frac{P}{\eta\sqrt{3}\ V\ \cos\varphi} \qquad Is = \frac{}{\sqrt{3}\ V_{load}}$$

ACPC Master - Dip-Switch Configuration				
Dip 1	Dip 2	Dip 3	Dip 4	Dip 5
ON	OFF	ON	OFF	ON

- FIRING MODE: ZC, BF
- HB DIAGNOSTIC AVAILABLE: Partial and total load failure

FAST FUSE: needed only for controller with option Fuse = 0

GG Fuse: See Fuse section

V = phase voltage (line L1- line L2/N)
P = total power
Vload = voltage on secondary (load)
Id = current in primary
Is = current in secondary
η= transformer output (typical 0,9)
if resistive load cos =1

ACPC Connection Example for 1 3-Phase Closed Delta Load

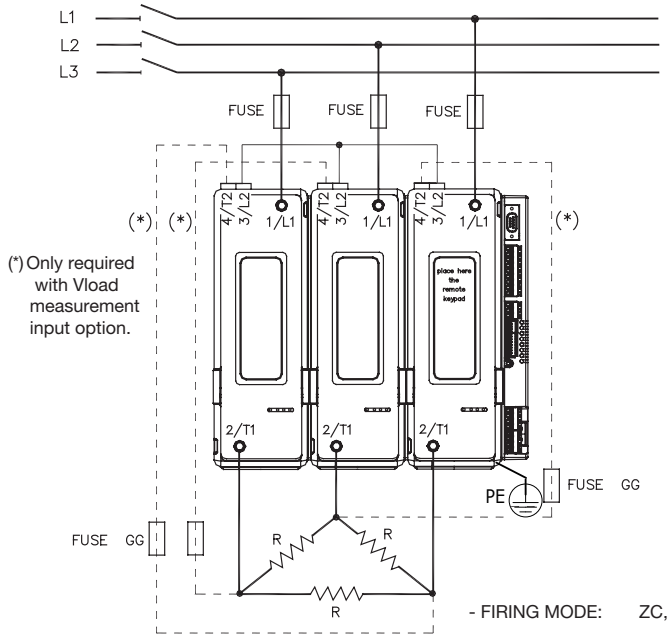

(*) Only required with Vload measurement input option.

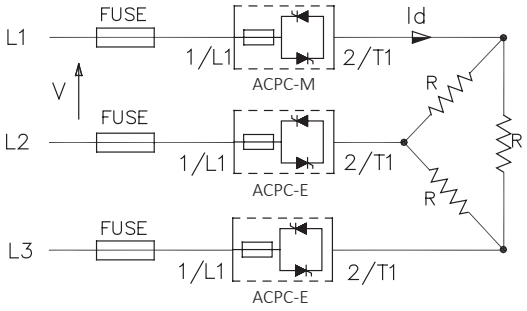

$$Id = \frac{P}{\sqrt{3}\, V \cos\varphi}$$

V= line voltage
P = total power
Id = load current

if resistive load cos =1

ACPC Master - Dip-Switch Configuration				
Dip 1	Dip 2	Dip 3	Dip 4	Dip 5
ON	ON	ON	OFF	OFF

- FIRING MODE: ZC, BF, PA (P>6%)
- HB DIAGNOSTIC AVAILABLE: Partial and total load failure of each single leg
- in PA mode, HB diagnostic active with P>30%

FAST FUSE: needed only for controller with option Fuse = 0

GG Fuse: See Fuse section

ACPC Connection Example for 1 3-Phase Closed Delta Load with Transformer

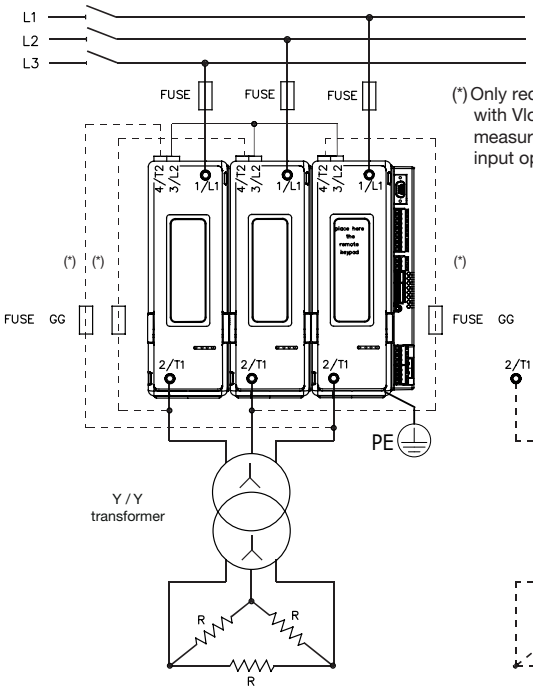

(*) Only required with Vload measurement input option.

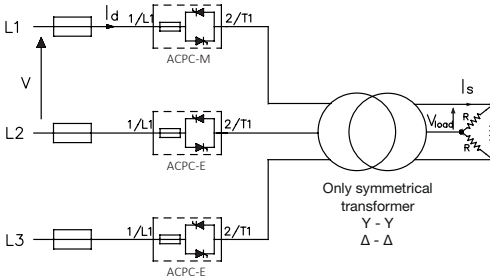

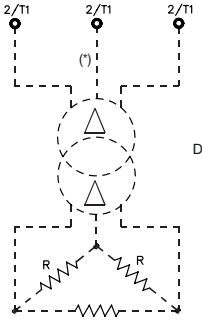

V = phase voltage (line L1- line L2/N)
P = power of each single-phase load
Vload = voltage on secondary (load)
Id = current in primary
Is = current in secondary
η= transformer output (type 0,9)

if resistive load cos =1

ACPC Master - Dip-Switch Configuration				
Dip 1	Dip 2	Dip 3	Dip 4	Dip 5
ON	ON	ON	OFF	ON

- FIRING MODE: ZC, PA (P>6%)
- HB DIAGNOSTIC AVAILABLE: Partial and total load failure of each single leg
- in PA mode, HB diagnostic active with P>30%

FAST FUSE: needed only for controller with option Fuse = 0
GG Fuse: See Fuse section

ACPC Connection Example for 1 3-Phase Star Load without Neutral

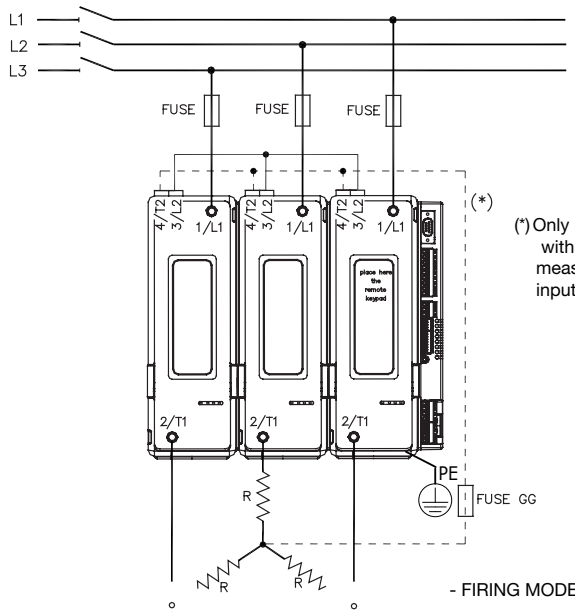

(*) Only required with Vload measurement input option.

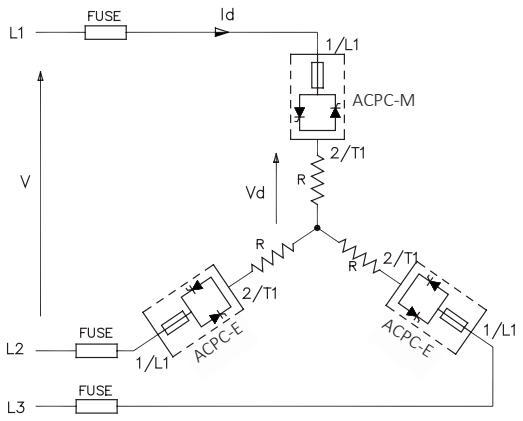

$$Vd = \frac{V}{\sqrt{3}} \qquad Id = \frac{P}{\sqrt{3}\,V\,\cos\varphi}$$

- FIRING MODE: ZC, BF, PA (P>6%)

- HB DIAGNOSTIC AVAILABLE: Partial and total load failure of each single leg

- in PA mode, HB diagnostic active with P>30%

FAST FUSE: needed only for controller with option Fuse = 0

GG Fuse: See Fuse section

V= line voltage
Vd= load voltage
P = total power
Id = load current

if resistive load cos =1

ACPC Master - Dip-Switches Configuration				
Dip 1	Dip 2	Dip 3	Dip 4	Dip 5
ON	OFF	OFF	ON	OFF

ACPC Connection Example for 1 3-Phase Star Load without Neutral with Transformer

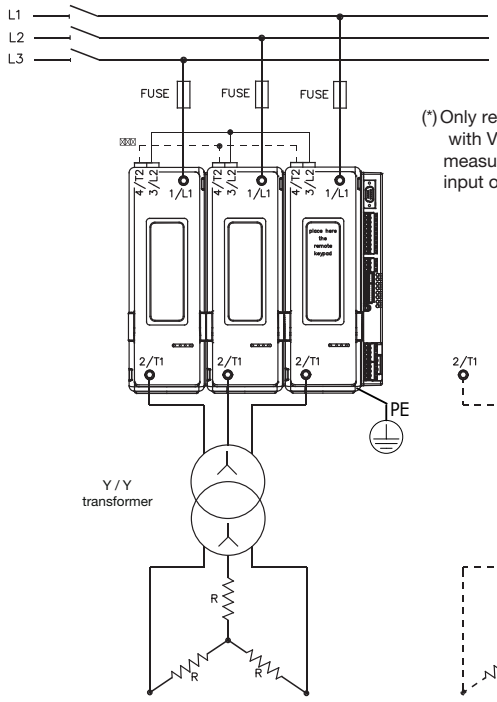

(*) Only required with Vload measurement input option.

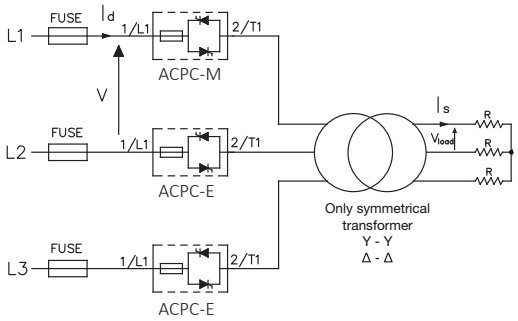

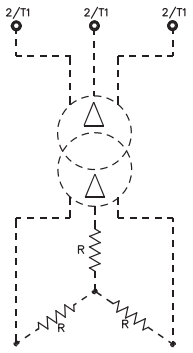

V = phase voltage (line L1- line L2/N)
P = power of each single-phase load
Vload = voltage on secondary (load)
Id = current in primary
Is = current in secondary
η= transformer output (type 0,9)

if resistive load cos =1

- FIRING MODE: ZC, PA (P>6%)
- HB DIAGNOSTIC AVAILABLE: Partial and total load failure of each single leg
- in PA mode, HB diagnostic active with P>30%

FAST FUSE: needed only for controller with option Fuse = 0
GG Fuse: See Fuse section

ACPC Master - Dip-Switches Configuration				
Dip 1	Dip 2	Dip 3	Dip 4	Dip 5
ON	OFF	OFF	ON	ON

ACPC Connection Example for 1 3-Phase Star Load with Neutral

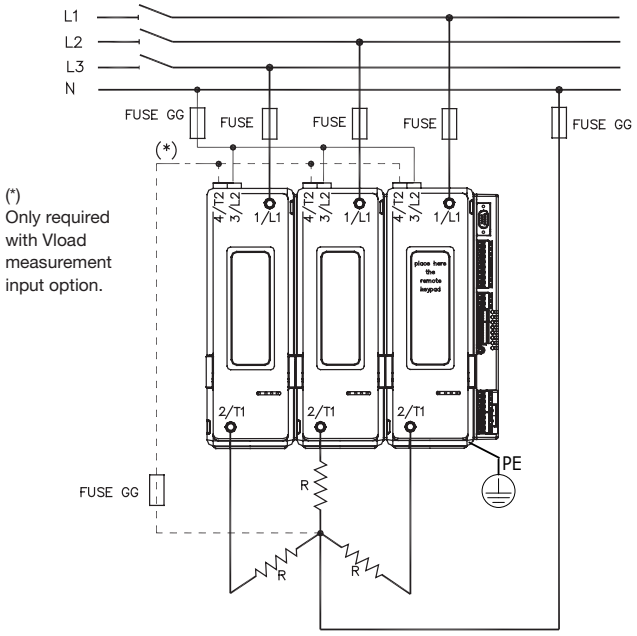

(*)
Only required with Vload measurement input option.

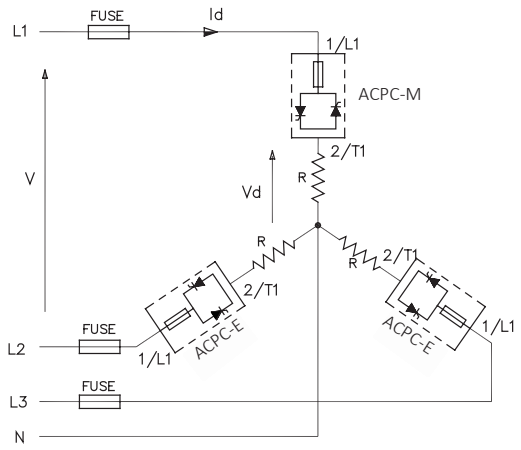

$$Vd = \frac{V}{\sqrt{3}} \qquad Id = \frac{P}{\sqrt{3} V \cos\varphi}$$

- FIRING MODE: ZC, BF, HSC, PA

ACPC Master - Dip-Switch Configuration				
Dip 1	Dip 2	Dip 3	Dip 4	Dip 5
ON	ON	OFF	OFF	OFF

- HB DIAGNOSTIC AVAILABLE:
Partial and total load failure of each single leg

FAST FUSE: needed only for controller with option Fuse = 0

GG Fuse: See Fuse section

V= line voltage
Vd= load voltage
P = total power
Id = current in 3-phase load

if resistive load cos =1

ACPC Connection Example for 1 3-Phase Load Open Delta

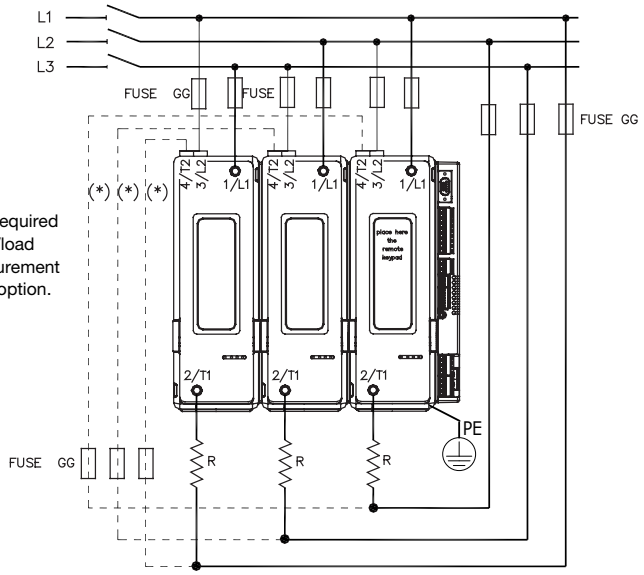

(*)
Only required with Vload measurement input option.

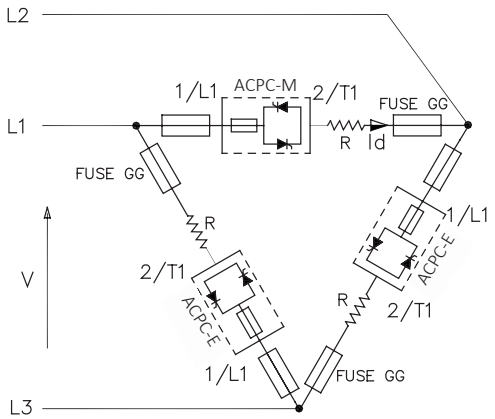

$$Id = \frac{P}{3V \cos\varphi}$$

ACPC Master - Dip-Switch Configuration				
Dip 1	Dip 2	Dip 3	Dip 4	Dip 5
ON	ON	OFF	OFF	OFF

- FIRING MODE: ZC, BF, HSC, PA

- HB DIAGNOSTIC AVAILABLE: Partial and total load failure of each single leg

FAST FUSE: needed only for controller with option Fuse = 0

GG Fuse: See Fuse section

V= line voltage
P = power of each single-phase load
Id = load current

if resistive load cos =1

ACPC Connection Example for 3 Independent Loads in Open Delta, 3-Phase Line without Neutral

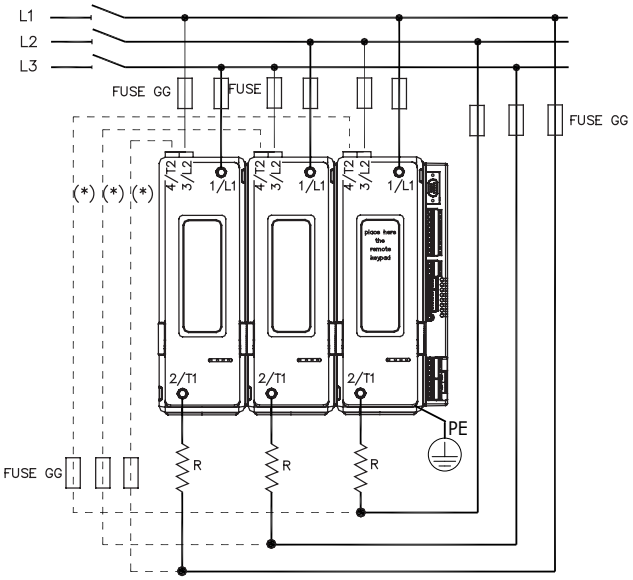

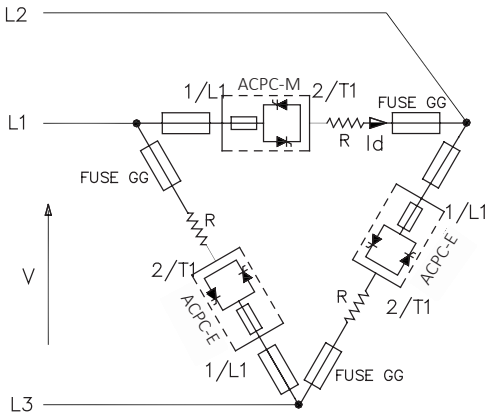

(*) Only required with Vload measurement input option.

$$Id = \frac{P}{V \cos\varphi}$$

V= line voltage
P = power of each single-phase load
Id = load current if resistive load cos =1

ACPC Master - Dip-Switch Configuration				
Dip 1	Dip 2	Dip 3	Dip 4	Dip 5
OFF	ON	OFF	OFF	OFF

- FIRING MODE: ZC, BF, HSC, PA
- HB DIAGNOSTIC AVAILABLE: Partial and total load failure of each single leg
- in PA mode, HB diagnostic active with P>30%

FAST FUSE: needed only for controller with option Fuse = 0
GG Fuse: See Fuse section

ACPC Example of ACPC 3-PH Wiring for 3 Independent Single-Phase Loads

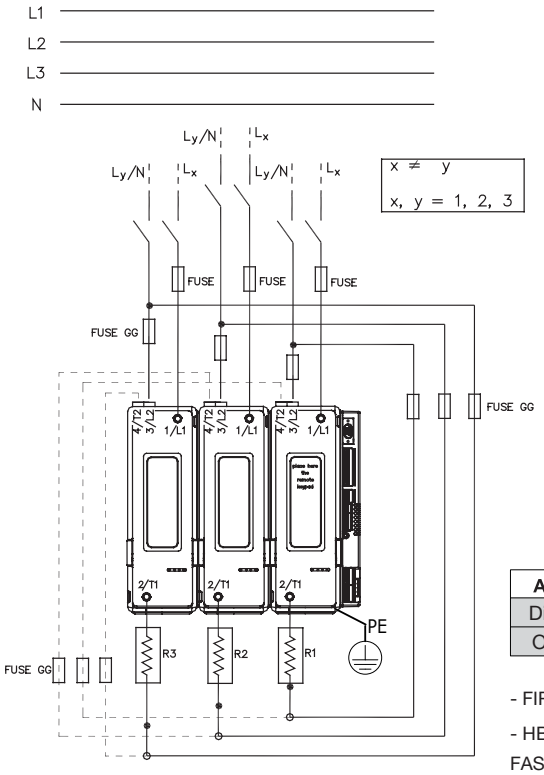

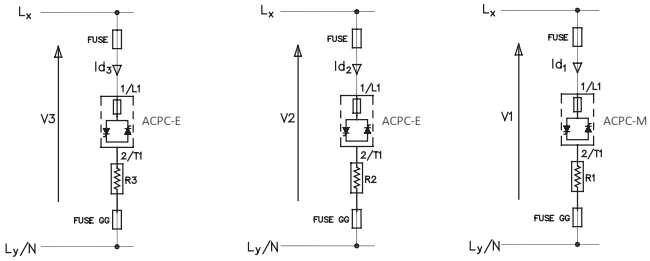

$$Id = \frac{P}{V \cos\varphi}$$

V= line voltage
P = power of each single-phase load
Id = load current if resistive load cos =1

ACPC Master - Dip-Switch Configuration				
Dip 1	Dip 2	Dip 3	Dip 4	Dip 5
OFF	OFF	OFF	OFF	OFF

- FIRING MODE: ZC, BF, HSC, PA
- HB DIAGNOSTIC AVAILABLE: Partial and total load failure of each single leg

FAST FUSE: needed only for controller with option Fuse = 0
GG Fuse: See Fuse section

(400 to 600A)

ACPC Connection Example for 1 Single-Phase Load

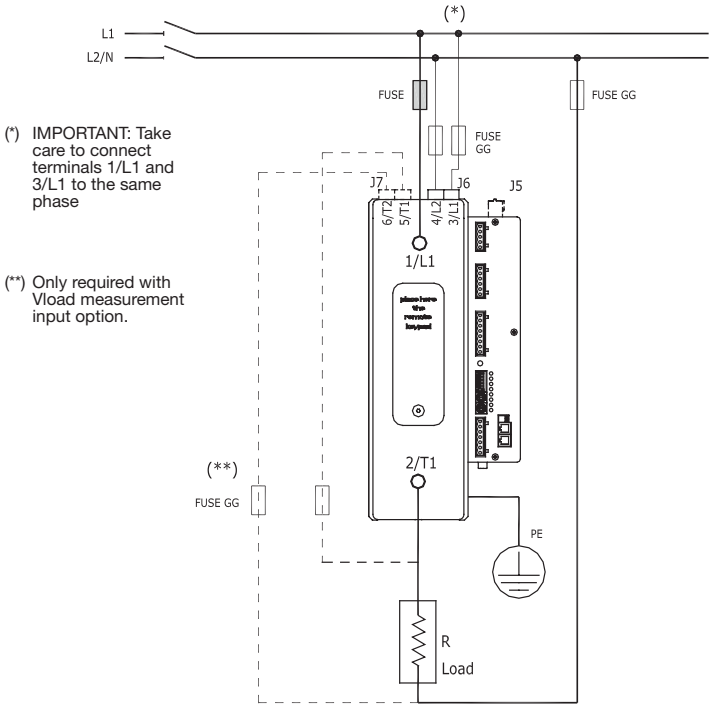

(*) IMPORTANT: Take care to connect terminals 1/L1 and 3/L1 to the same phase

(**) Only required with Vload measurement input option.

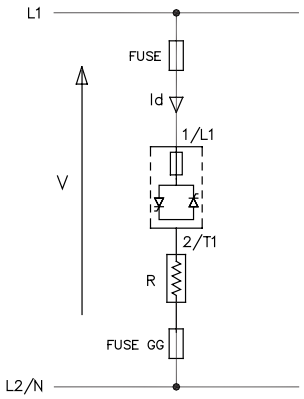

$$Id = \frac{P}{V \cos\varphi}$$

V	phase voltage (line - neutral)
P	power of each single-phase load
Id	load current if resistive load cosϕ=1

FIRING MODE	ZC, BF, HSC, PA
HB DIAGNOSTIC AVAILABLE	Partial and total load failure
Fast Fuse	Needed only for controller with option Fuse = 0
GG Fast Fuse	See Fuse section

ACPC Master - Dip-Switch Configuration				
Dip 1	Dip 2	Dip 3	Dip 4	Dip 5
OFF	OFF	OFF	OFF	OFF

ACPC Connection Example for 1 Single-Phase Transformer Load

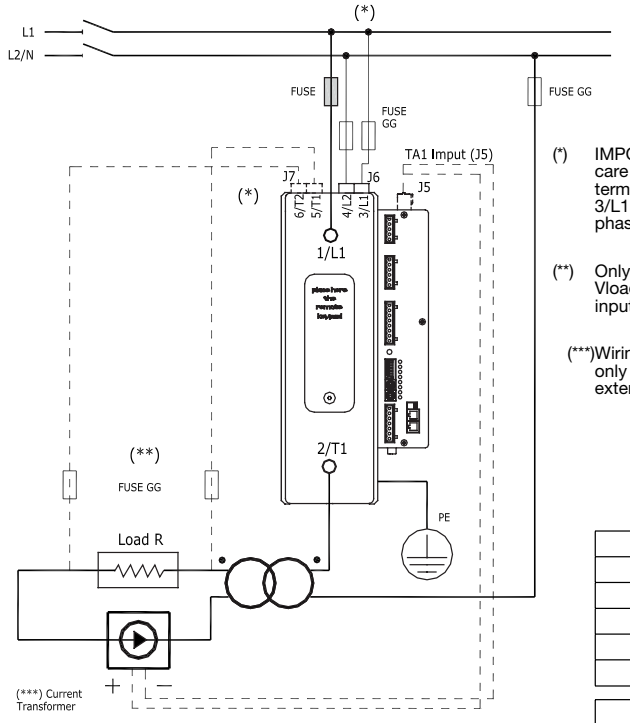

(*) IMPORTANT: Take care to connect terminals 1/L1 and 3/L1 to the same phase

(**) Only required with Vload measurement input option.

(***)Wiring required only with optional external TA input

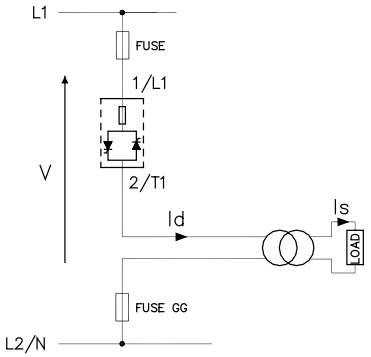

$$Id = \frac{P}{\eta V \cos\varphi} \qquad Is = \frac{P}{V_{load} \cos\varphi}$$

V	phase voltage (line L1- line L2/N)
P	power of each single-phase load
Vload	voltage on secondary (load)
Id	current in primary
Is	current in secondary
φ	transformer output (typical 0,9) pif resistive load cosϕ=1

FIRING MODE	ZC, PA BF (BF.CY ≥ 2)
HB DIAGNOSTIC AVAILABLE	Partial and total load failure
Fast Fuse	Needed only for controller with option Fuse = 0
GG Fast Fuse	See Fuse section

ACPC Master - Dip-Switch Configuration				
Dip 1	Dip 2	Dip 3	Dip 4	Dip 5
OFF	OFF	OFF	OFF	ON

ACPC 2-PH for 2 Independent Single Phase Loads

It is possible to connect two single-phase loads also to different line voltages, between line to line or line to neutral. It is possible to manage different power values for each one of the two loads.

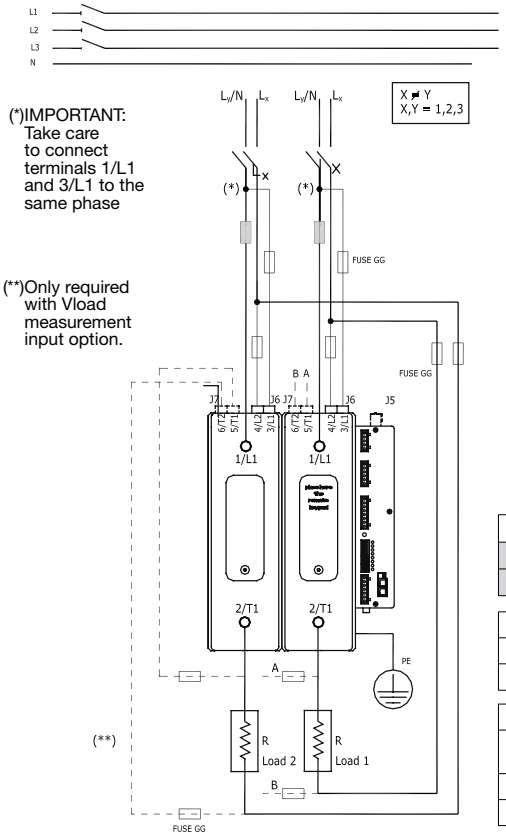

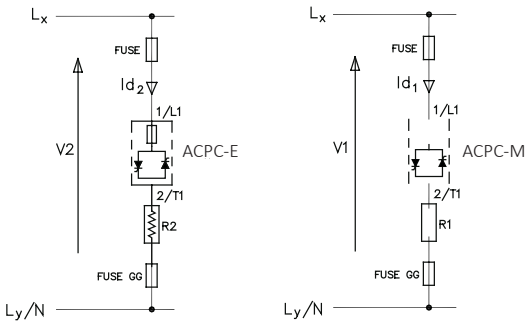

$$Id = \frac{P}{V \cos\varphi}$$

ACPC Master - Dip-Switch Configuration				
Dip 1	Dip 2	Dip 3	Dip 4	Dip 5
OFF	OFF	OFF	OFF	OFF

V	line voltage
P	power of each single-phase load
Id	load current if resistive load cosϕ=1

FIRING MODE	ZC, BF, HSC, PA
HB DIAGNOSTIC AVAILABLE	Partial and total load failure pof each single leg
Fast Fuse	Needed only for controller with option Fuse = 0
GG Fast Fuse	See Fuse section

ACPC Connection Example 3-Phase 2-leg Connection for a 3-Phase Star Load without Neutral

(*) IMPORTANT: Take care to connect terminals 1/L1 and 3/L1 to the same phase

(**) Only required with Vload measurement input option.

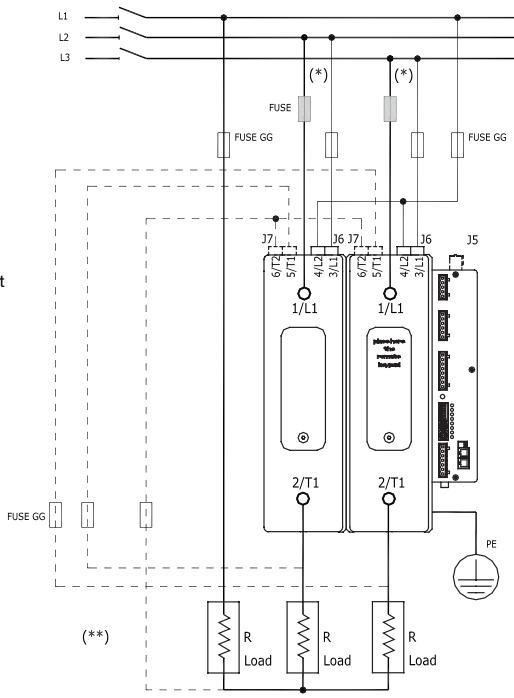

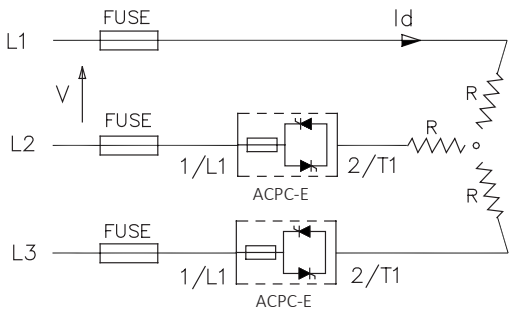

V	line voltage
P	total power
Id	load current pif resistive load cosϕ=1

FIRING MODE	ZC, BF
HB DIAGNOSTIC AVAILABLE	Total load failure
Fast Fuse	Needed only for controller with option Fuse = 0
GG Fast Fuse	See Fuse section

ACPC Master - Dip-Switch Configuration				
Dip 1	Dip 2	Dip 3	Dip 4	Dip 5
ON	OFF	OFF	OFF	OFF

ACPC Connection Example 3-Phase, 2-Leg Connection for a 3-Phase Star Load without Neutral with Transformer

(*)IMPO RTANT: Take care to connect terminals 1/L1 and 3/L1 to the same phase

Control option =0

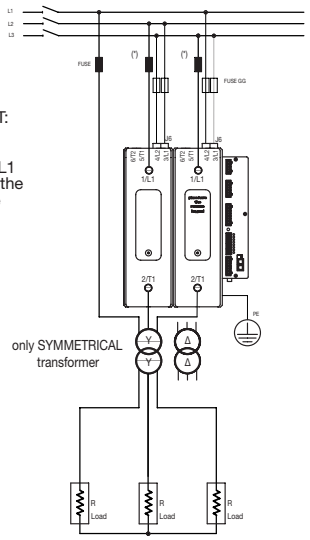

Control option = 3 (Vload input)

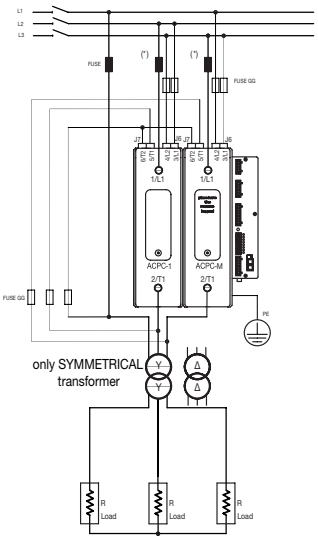

Control option = 4 (Vload input and externalTA input)

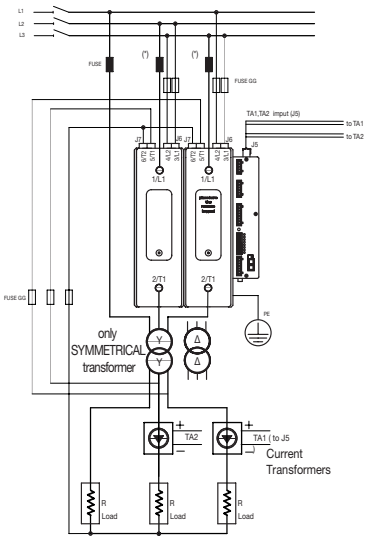

V	phase voltage (line L1- line L2/N)
P	total power
Vload	voltage on secondary (load)
Id	current in primary
Is	current in secondary
η	transformer output (typical 0,9) pif resistive load cosϕ=1

FIRING MODE	ZC, BF
HB DIAGNOSTIC AVAILABLE	Total load failure
Fast Fuse	Needed only for controller with option Fuse = 0
GG Fast Fuse	See Fuse section

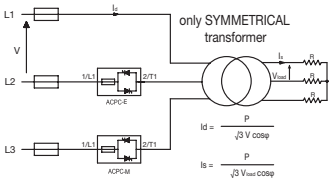

ACPC Master - Dip-Switch Configuration				
Dip 1	Dip 2	Dip 3	Dip 4	Dip 5
ON	OFF	OFF	OFF	ON

ACPC Connection Example 3-Phase 2-leg Connection for a 3-Phase Closed Delta Load

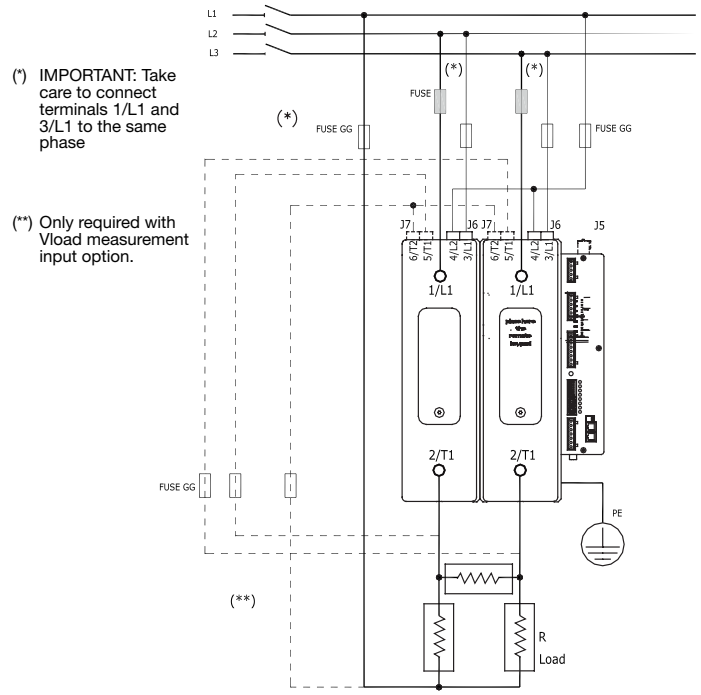

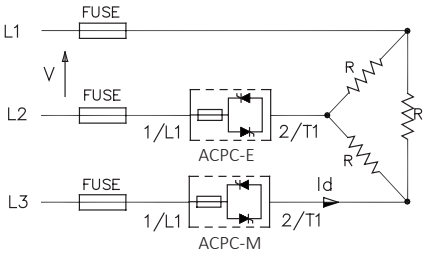

$$Id = \frac{P}{\sqrt{3}\ V\ \cos\varphi}$$

ACPC Master - Dip-Switch Configuration				
Dip 1	Dip 2	Dip 3	Dip 4	Dip 5
ON	OFF	ON	OFF	OFF

V	line voltage
P	total power
Id	load current if resistive load cosϕ=1

FIRING MODE	ZC, BF
HB DIAGNOSTIC AVAILABLE	Total load failure (partial only for closed triangle load)
Fast Fuse	Needed only for controller with option Fuse = 0
GG Fast Fuse	See Fuse section

ACPC Connection Example 3-Phase, 2-Leg Connection for a 3-Phase Closed Delta Load with Transformer

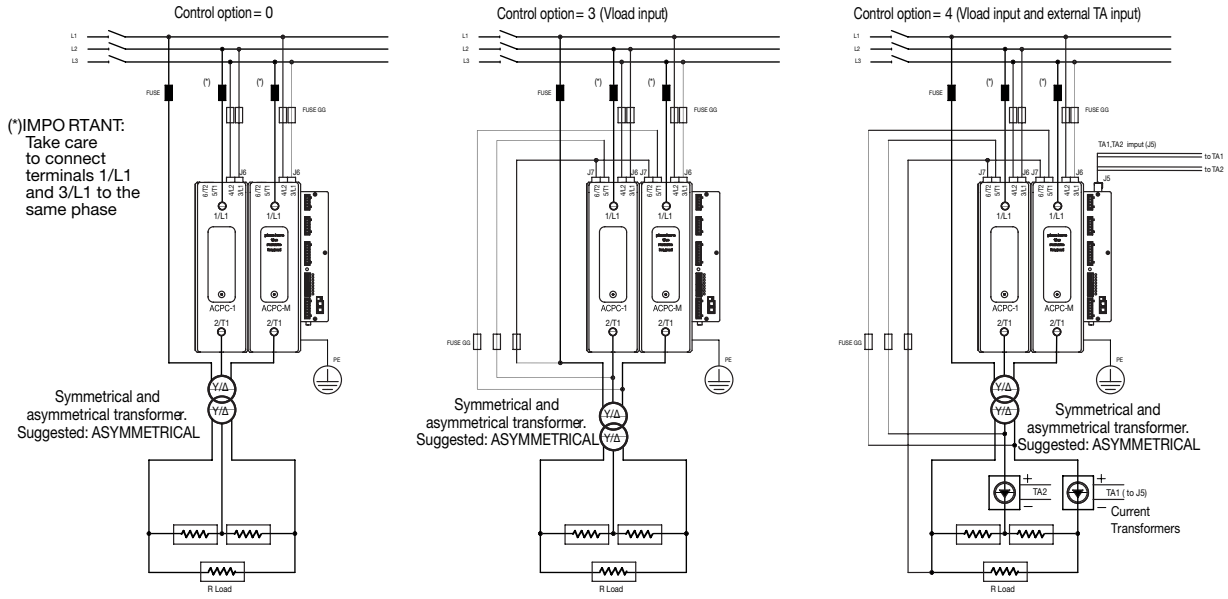

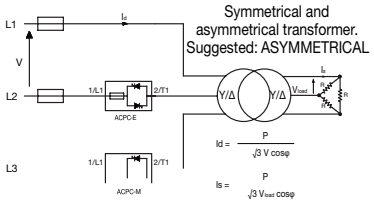

V	phase voltage (line L1- line L2/N)
P	total power
Vload	voltage on secondary (load)
Id	current in primary
Is	current in secondary
η	transformer output (typical 0,9) pif resistive load cosϕ=1

FIRING MODE	ZC, BF
HB DIAGNOSTIC AVAILABLE	Total load failure
Fast Fuse	Needed only for controller with option Fuse = 0
GG Fast Fuse	See Fuse section

ACPC Master - Dip-Switch Configuration				
Dip 1	Dip 2	Dip 3	Dip 4	Dip 5
ON	OFF	OFF	OFF	ON

ACPC Connection Example for 1 3-Phase Closed Delta Load

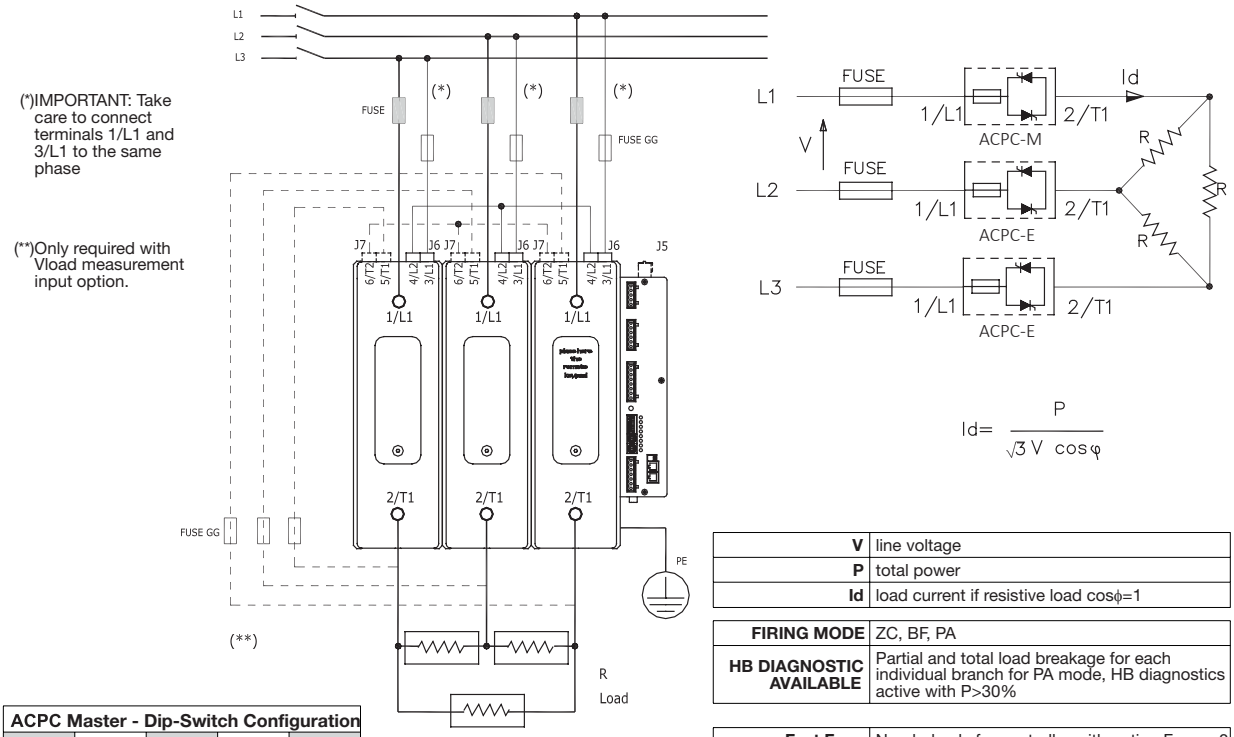

ACPC Master - Dip-Switch Configuration				
Dip 1	Dip 2	Dip 3	Dip 4	Dip 5
ON	ON	ON	OFF	OFF

V	line voltage
P	total power
Id	load current if resistive load cosϕ=1

FIRING MODE	ZC, BF, PA
HB DIAGNOSTIC AVAILABLE	Partial and total load breakage for each individual branch for PA mode, HB diagnostics active with P>30%

Fast Fuse	Needed only for controller with option Fuse = 0
GG Fast Fuse	See Fuse section

ACPC Connection Example for 1 3-Phase Closed Delta Load with Transformer

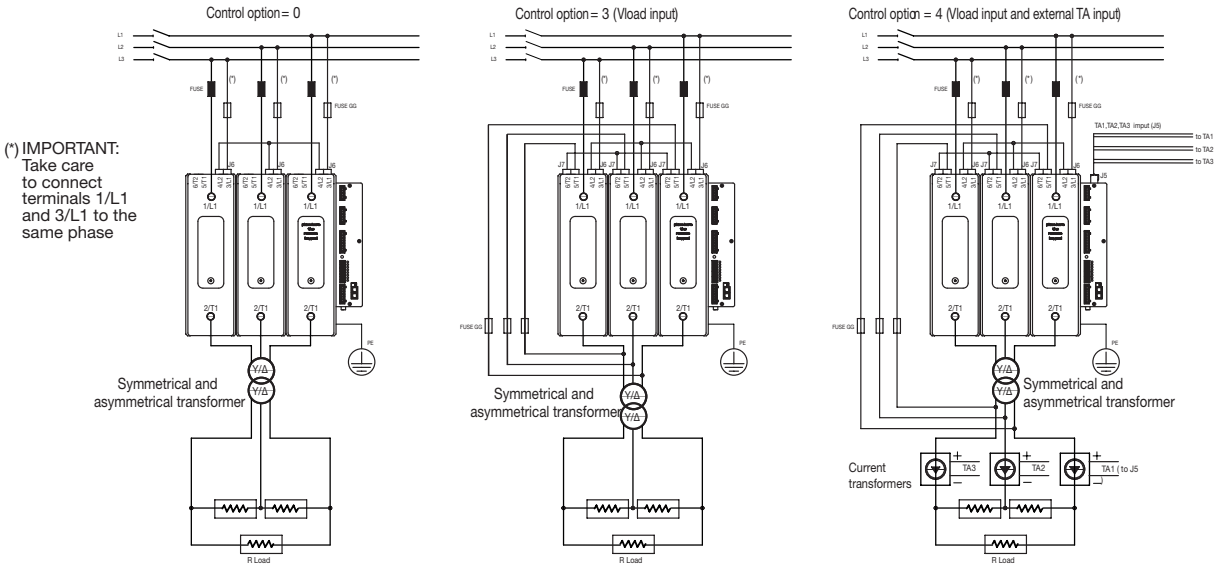

V	phase voltage (line L1- line L2/N)
P	total power
Vload	voltage on secondary (load)
Id	current in primary
Is	current in secondary
η	transformer output (typical 0,9) pif resistive load cosϕ=1

FIRING MODE	ZC, PA BF (bF.Cy ≥ 2)
HB DIAGNOSTIC AVAILABLE	Partial and total load breakage for each individual branch for PA mode, HB diagnostics active with P>30%

Fast Fuse	Needed only for controller with option Fuse = 0
GG Fast Fuse	See Fuse section

ACPC Master - Dip-Switch Configuration				
Dip 1	Dip 2	Dip 3	Dip 4	Dip 5
ON	ON	ON	OFF	ON

ACPC Connection Example for 1 3-Phase Star Load without Neutral

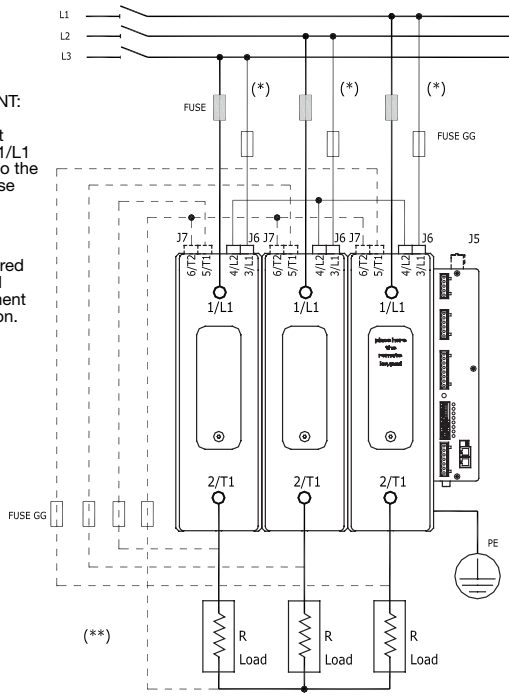

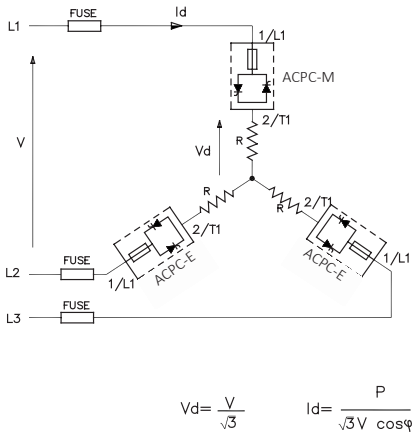

V	line voltage
Vd	tensione del carico
P	total power
Id	load current if resistive load cosϕ=1

FIRING MODE	ZC, BF, PA
HB DIAGNOSTIC AVAILABLE	Partial and total load breakage for each individual branch for PA mode, HB diagnostics active with P>30%

Fast Fuse	Needed only for controller with option Fuse = 0
GG Fast Fuse	See Fuse section

ACPC Master - Dip-Switch Configuration

Dip 1	Dip 2	Dip 3	Dip 4	Dip 5
ON	OFF	OFF	ON	OFF

ACPC Connection Example for 1 3-Phase Star Load without Neutral with Transformer

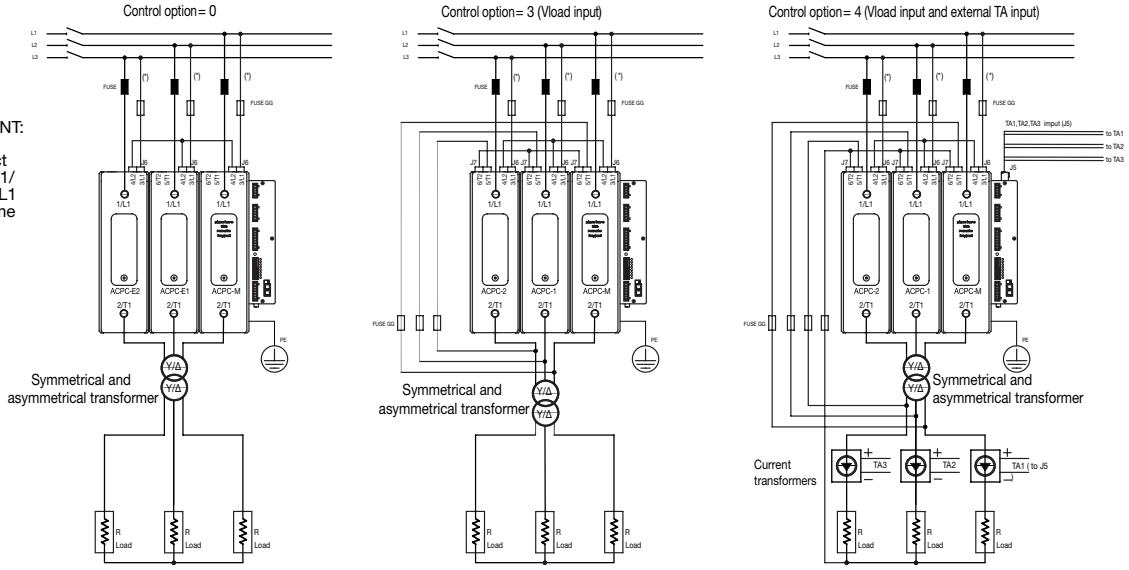

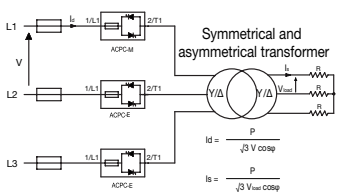

V	phase voltage (line L1- line L2/N)
P	total power
Vload	voltage on secondary (load)
Id	current in primary
Is	current in secondary
η	transformer (type 0.9) performance if resistive load cosϕ=1

FIRING MODE	ZC, PA BF (bF.Cy ≥ 2)
HB DIAGNOSTIC AVAILABLE	Partial and total load breakage for each individual branch for PA mode, HB diagnostics active with P>30%

Fast Fuse	Needed only for controller with option Fuse = 0
GG Fast Fuse	See Fuse section

ACPC Master - Dip-Switch Configuration

Dip 1	Dip 2	Dip 3	Dip 4	Dip 5
ON	OFF	OFF	ON	ON

ACPC Connection Example for 1 3-Phase Star Load with Neutral

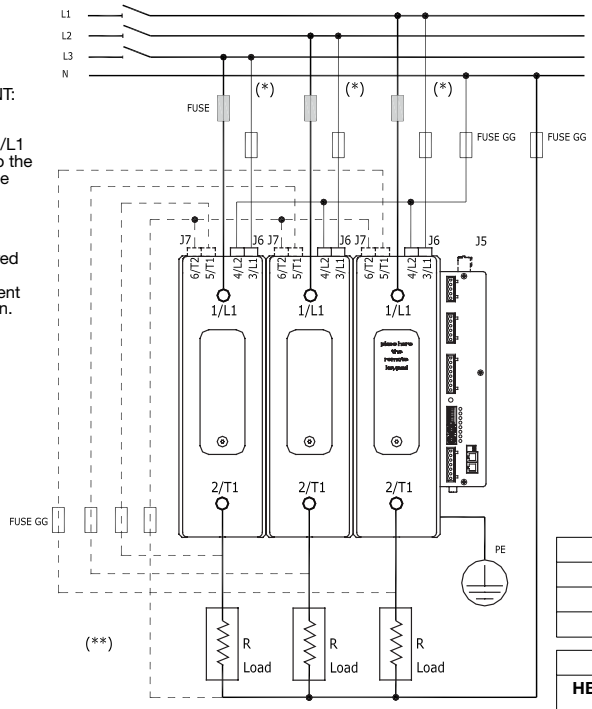

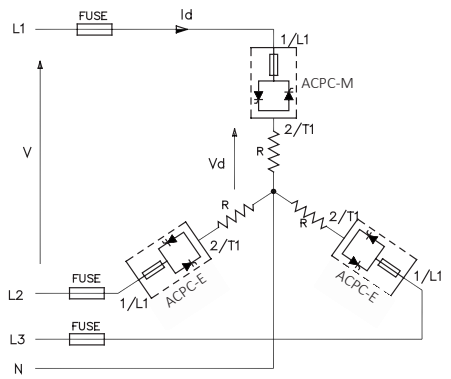

$$Vd = \frac{V}{\sqrt{3}} \qquad Id = \frac{P}{\sqrt{3}V\ \cos\varphi}$$

V	line voltage
Vd	load voltage
P	total power
Id	current in three-phase load if resistive load cosϕ =1

FIRING MODE	ZC, BF, HSC, PA
HB DIAGNOSTIC AVAILABLE	Partial and total load failure pof each single leg
Fast Fuse	Needed only for controller with option Fuse = 0
GG Fast Fuse	See Fuse section

CFW Master - Dip-Switches Configuration				
Dip 1	Dip 2	Dip 3	Dip 4	Dip 5
ON	ON	OFF	OFF	OFF

ACPC Connection Example for 1 3-Phase Load Open Delta

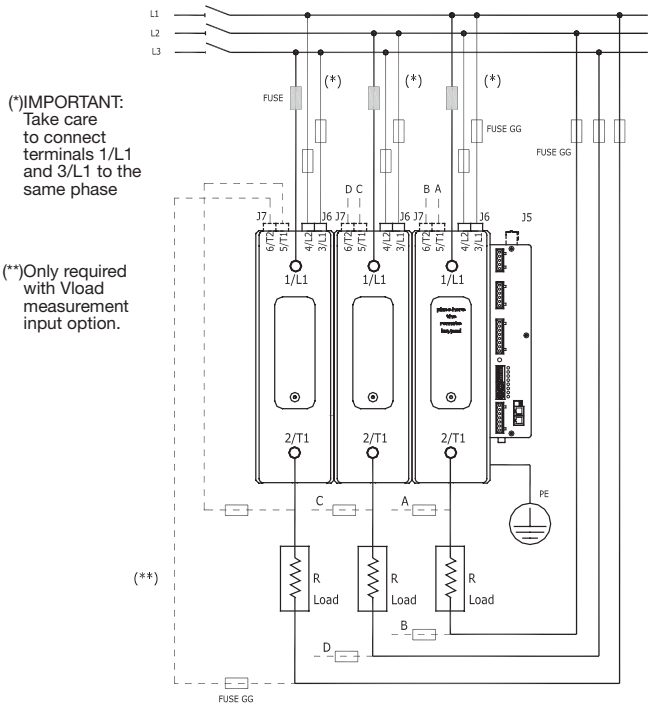

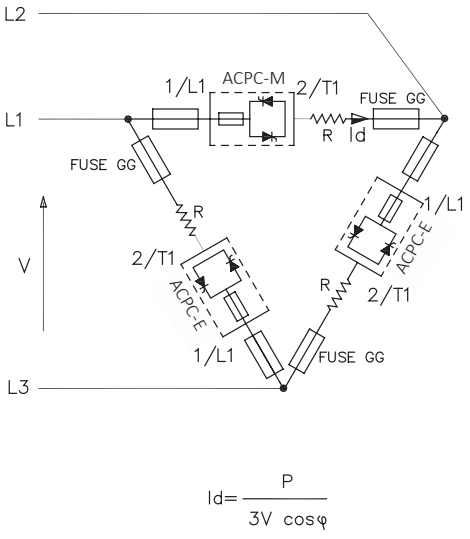

$$Id = \frac{P}{3V\ \cos\varphi}$$

V	line voltage
P	power of each single-phase load
Id	load current if resistive load cosϕ=1

FIRING MODE	ZC, BF, HSC, PA
HB DIAGNOSTIC AVAILABLE	Partial and total load failure for each single leg
Fast Fuse	Needed only for controller with option Fuse = 0
GG Fast Fuse	See Fuse section

CFW Master - Dip-Switches Configuration				
Dip 1	Dip 2	Dip 3	Dip 4	Dip 5
ON	ON	OFF	OFF	OFF

ACPC Connection Example for Independent Loads in Open Delta, 3-Phase Line without Neutral

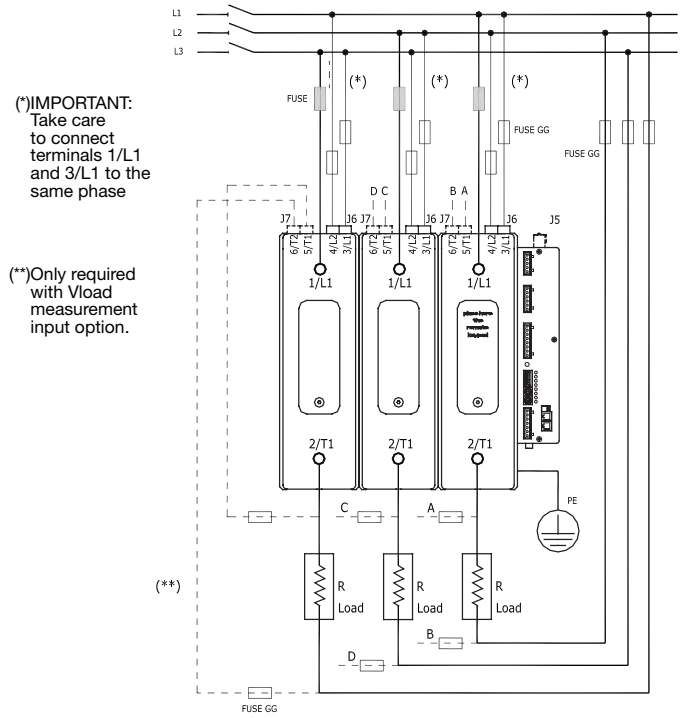

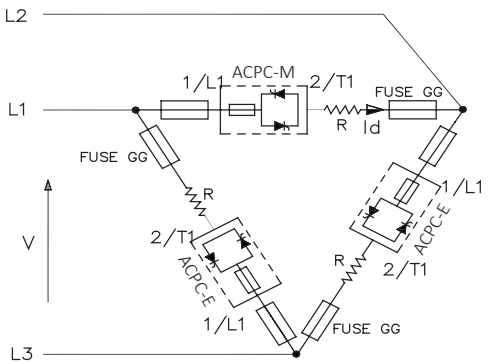

$$Id = \frac{P}{V \cos\varphi}$$

CFW Master - Dip-Switches Configuration				
Dip 1	Dip 2	Dip 3	Dip 4	Dip 5
OFF	ON	OFF	OFF	OFF

V	line voltage
P	power of each single-phase load
Id	load current if resistive load cosϕ=1

FIRING MODE	ZC, BF, HSC, PA
HB DIAGNOSTIC AVAILABLE	Partial and total load failure pof each single leg

Fast Fuse	Needed only for controller with option Fuse = 0
GG Fast Fuse	See Fuse section

ACPC 3-Phase wiring for 3 Independent Single-Phase Loads

It is possible to connect two single-phase loads also to different line voltages, between line to line or line to neutral. It is possible to manage different power values for each one of the two loads.

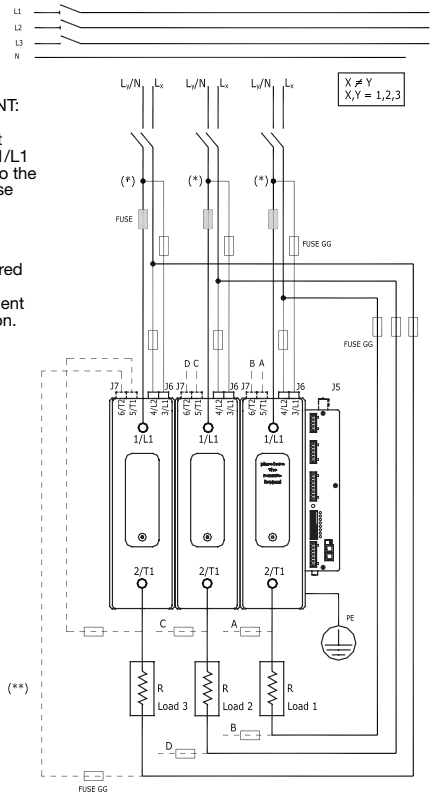

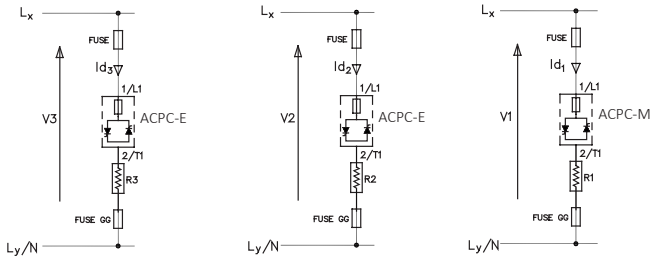

$$Id = \frac{P}{V \cos\varphi}$$

CFW Master - Dip-Switches Configuration				
Dip 1	Dip 2	Dip 3	Dip 4	Dip 5
OFF	OFF	OFF	OFF	OFF

V	line voltage
P	power of each single-phase load
Id	load current if resistive load cosϕ=1

FIRING MODE	ZC, BF, HSC, PA
HB DIAGNOSTIC AVAILABLE	Partial and total load failure pof each single leg
Fast Fuse	Needed only for controller with option Fuse = 0
GG Fast Fuse	See Fuse section

8. Inductive and Transformer Coupled Load Guidelines

8.1 Notes: Use with inductive loads and transformers

1. when the ACPC is working it is not allowed to open neither the connection between ACPC and the trans-former nor the connection between the transformer and the load
2. The maximum current controllable by the device is less than the product's rated value (see technical data).
3. In ZC and BF trigger mode, use the Delay-triggering function to limit peak magnetization current.
4. In PA trigger mode, use the Softstart function.
5. DO NOT use HSC trigger mode.
6. DO NOT connect RC snubbers in parallel to the transformer primary.
7. Always set Dip-Switch 5 to ON (and run the initial configuration procedure as described.

9. Firing (Trigger) Mode Overview

9.1 Trigger Modes

The ACPC has the following power control modes:

- modulation via variation of number of conduction cycles with zero crossing trigger.
- modulation via variation of phase angle.

Zero Crossing mode

This function eliminates EMC noise. This mode controls power on the load via a series of conduction ON and non conduction OFF cycles.

ZC - constant cycle time (Tc ≥ 1 sec, settable from 1 to 200 sec)

Cycle time is divided into a series of conduction and non conduction cycles in proportion to the power value to be transferred to the load.

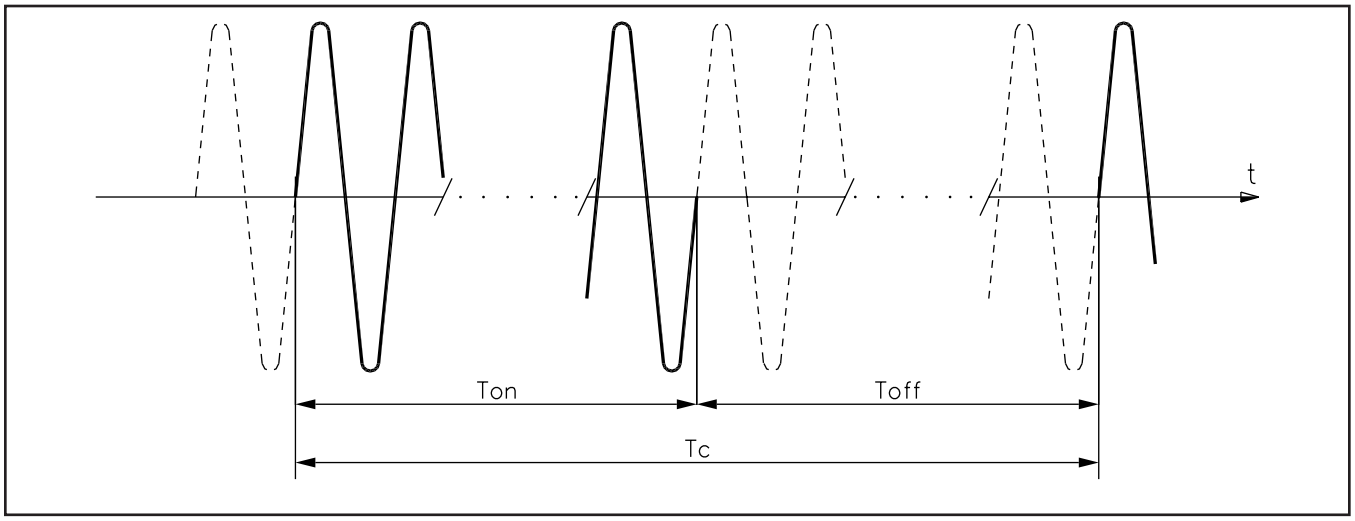

For example, if Tc = 10sec, if the power value is 20% there is conduction for 2 sec (100 conduction cycles @ 50Hz) and non conduction for 8 sec (400 non conduction cycles @ 50Hz).

BF - variable cycle time (GTT)
This mode controls power on the load via a series of conduction ON and non conduction OFF cycles.
The ratio of the number of ON cycles to OFF cycles is proportional to the power value to be supplied to the load.

The CT repeat period is kept to a minimum for each power value (whereas in ZC mode the period is always fixed and not optimized).

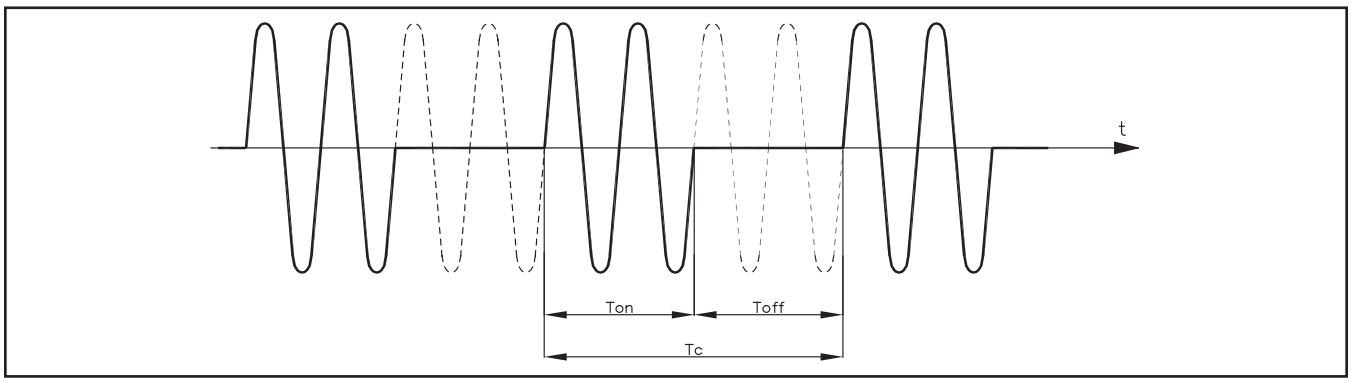

parameter defines the minimum number of conduction cycles settable from 1 to 10.
In the following example, the parameter = 2.

HSC - Half single cycle

This mode corresponds to Burst Firing that manages ON and OFF half-cycles. It is useful for reducing the flickering of filaments with short/medium-wave IR lamp loads. With these loads, to limit operating current with low power, it is useful to set a minimum power limit (for example Lo.P = 10%, ref “ACPC-IR operation guide”).

NB.: This mode is NOT allowed with inductive loads (transformers) It is used with resistive loads in singlephase, star with neutral, or open delta configuration

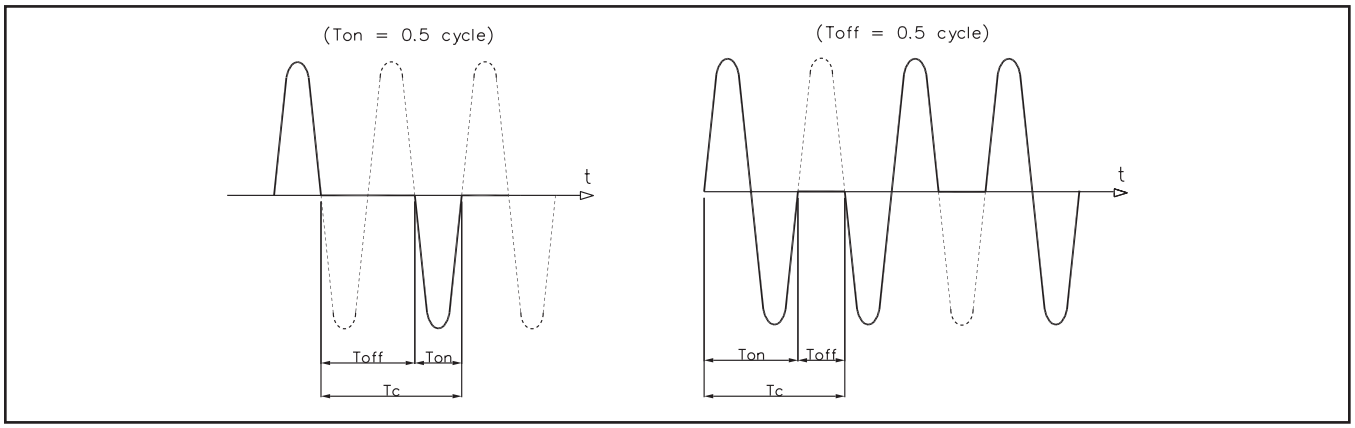

Example of operation in HSC mode with power at 33 and 66%.

Phase Angle (PA)
This mode controls power on the load via modulation of trigger angle q
if power to be transferred to the load is 100%, q = 180°
if power to be transferred to the load is 50%, q = 90°

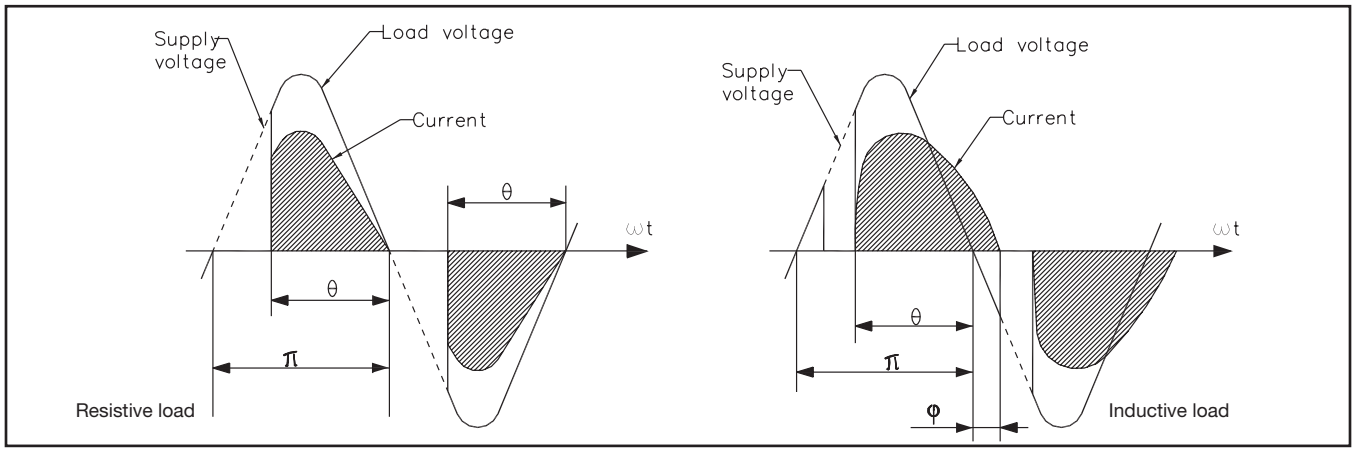

ADDITIONAL FUNCTIONS

Softstart

This type of start can be enabled either in phase control or pulse train mode and in zero-crossing mode (ZC, BF, HSC).

In phase control, the increment of conduction angle q stops at the corresponding value of the power to be transferred to the load.

Control of maximum peak current (useful in case of short circuit on the load or of loads with high temperature coefficients to automatically adjust start time to the load) can be enabled during softstart. When the load shut-off time (settable) is exceeded, the ramp is reactivated at the next power-on.

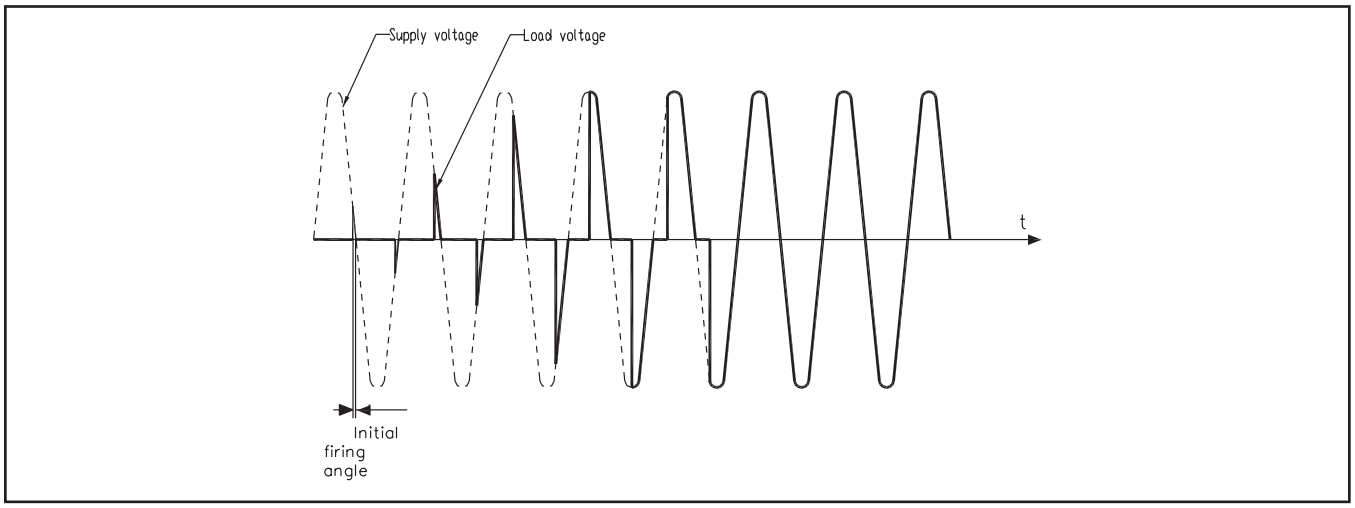

Example of firing ramp with phase Soft-Start

RMS Current Limit

The option for controlling the load current limit is available in all work modes.

If the current value exceeds the limit (settable in the nominal full-scale range) in mode PA the conduction angle is limited, while in zero-crossing mode (ZC, BF, HSC) the cycle time conduction percentage is limited.

This limitation ensures that the RMS value (i.e., not the instantaneous value) of the load current does NOT exceed the set RMS current limit.

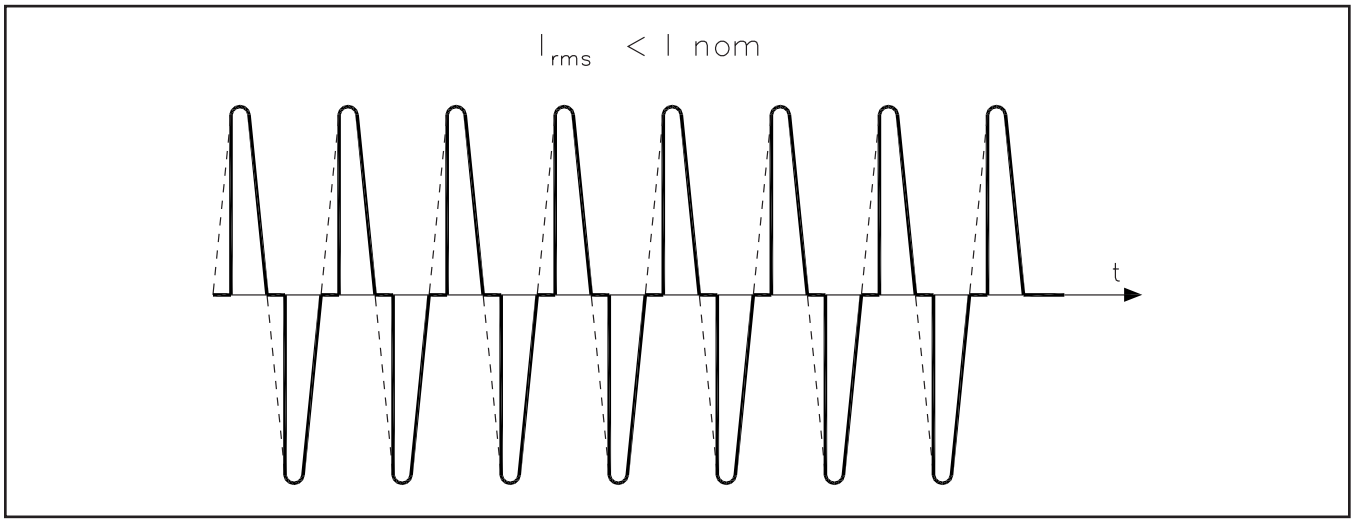

Example of conduction angle limitation in PA mode to respect an RMS current limit below the nominal current of the load.

DT - Delay Triggering

“Delay triggering” (for ZC, BF control modes only)

Settable from 0° to 90°.

Useful for inductive loads (transformer primaries) to prevent current peak that in certain cases could trip the high-speed fuses that protect the SCRs.

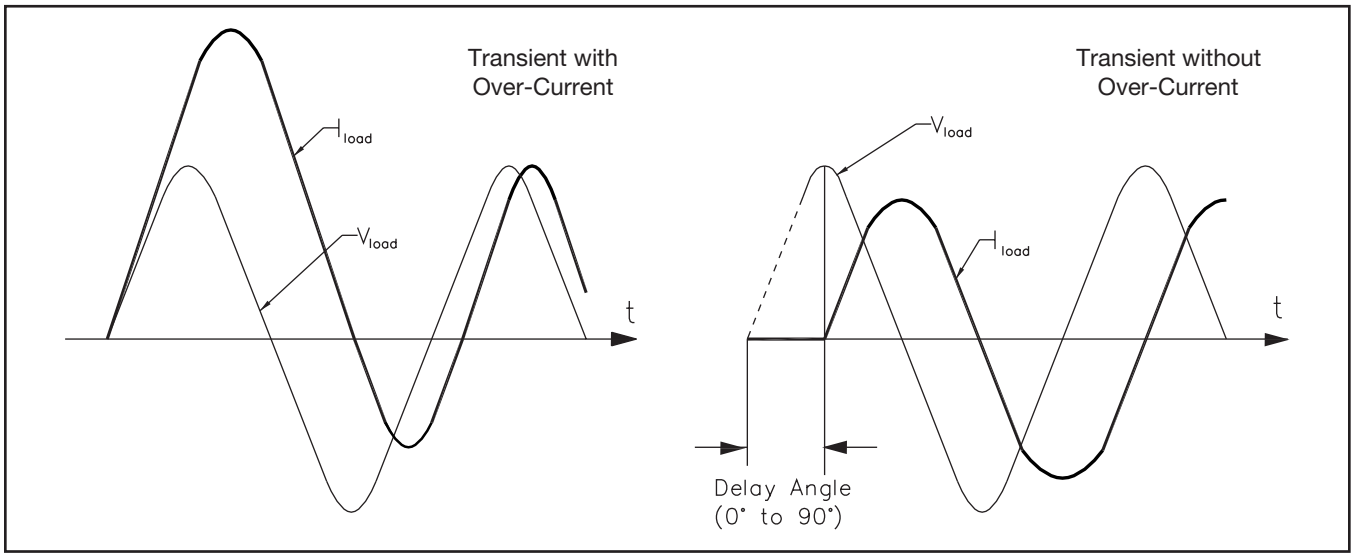

Example of firing of inductive load with/without delay-triggering.

To conduct inductive loads controlled in PA mode, do not use delay triggering; instead, use the phase Soft-Start ramp.

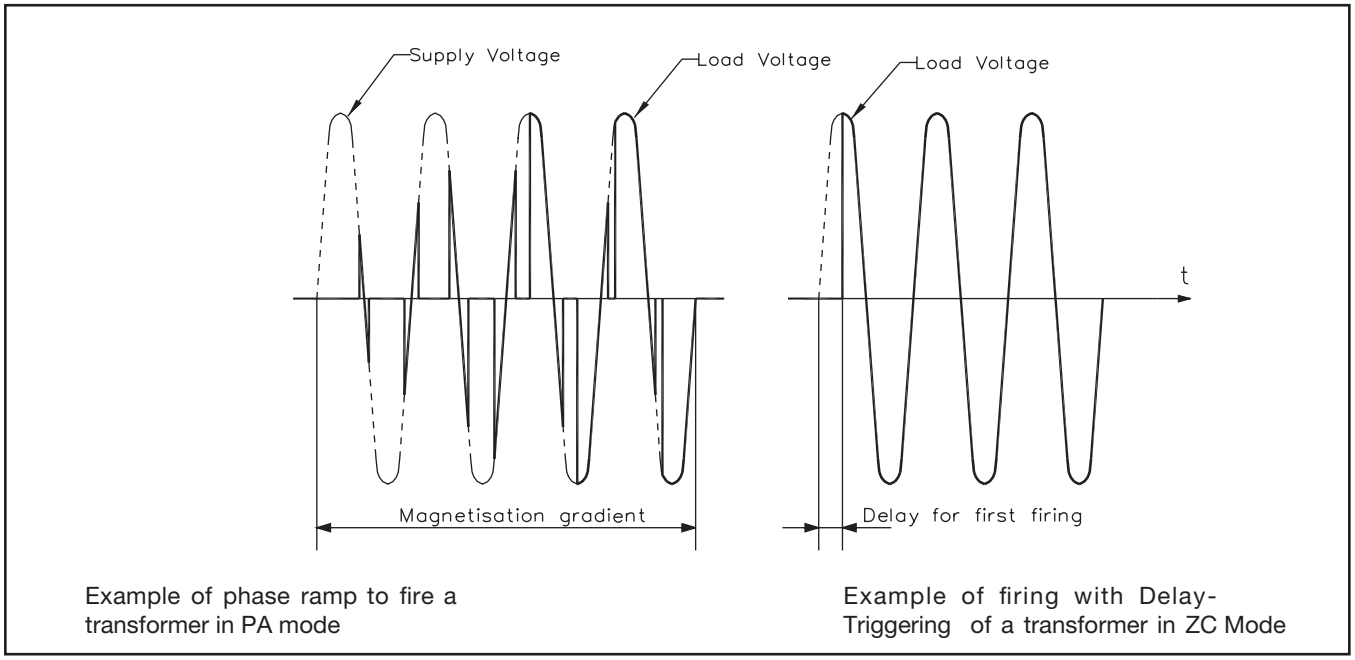

Example of phase ramp to fire a transformer in PA mode

Example of firing with Delay-Triggering of a transformer in ZC Mode

Comparison of method to fire a transformer: Soft-Start Ramp (for PA mode) / Delay triggering (for ZC and BF mode)

9.2 Digital Input (PWM), 40-300A Models

The ACPC has the following power control modes:

This digital input can be used to receive information on the % of power to be supplied to the load.

The signal can be generated by a controller or external plc via digital outputs (logic output for Chromalox instrumentation).

This is obtained by alternating the output in ON for time TON with the output in OFF for time TOFF.

The sum of TON+TOFF is constant, and is called CycleTime.

CycleTime= TON+TOFF

The power level is given by the ratio = TON/ CycleTime and is normally expressed in %.

The ACPC digital input automatically adapts to the cycle time from 0.03Hz to 100Hz and obtains the power % to be supplied to the load from the TON/ (TON+TOFF) ratio.

Connection example:

Temperature control with Chromalox 600 with D type logic output (out2) (cycle time: 0.1sec), logic output can drive max 3 ACPC in series (preferable), connection allowed only if ACPCs do not have interconnected GNDs (if so, make parallel con-nection).

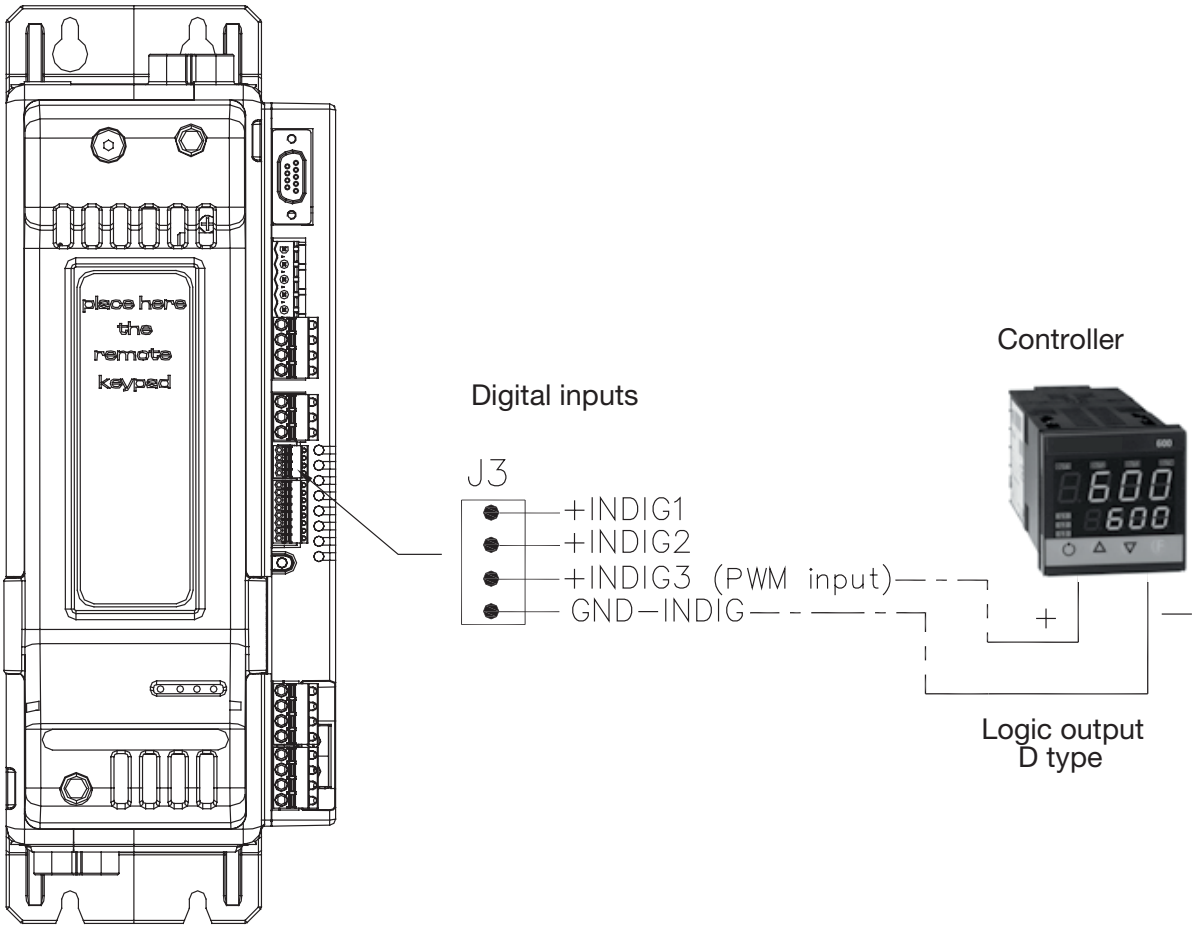

9.3 Digital Input (PWM), 400-600A Models

This digital input can be used to receive information on the % of power to be supplied to the load. (refer to the SW Manual for configuration of the digital input).

The signal can be generated by a controller or external plc via digital outputs (logic output for Chromalox instrumentation).

This is obtained by alternating the output in ON for time TON with the output in OFF for time TOFF.

The sum of TON+TOFF is constant, and is called CycleTime.

CycleTime= TON+TOFF

The power level is given by the ratio = TON/ CycleTime and is normally expressed in %.

The ACPC digital input INDIG1 automatically adapts to the cycle time from 0.03Hz to 100Hz and obtains the power % to be supplied to the load from the TON/(TON+TOFF) ratio.

Connection example:

NOTE: for inputs INDIG2 and INDIG3, the maximum PWM frequency is limited to 1Hz, and INDIG4 cannot be configured as a PWM input

Temperature control with Chromalox 600 with D type logic output (out2) (cycle time: 0.1sec),

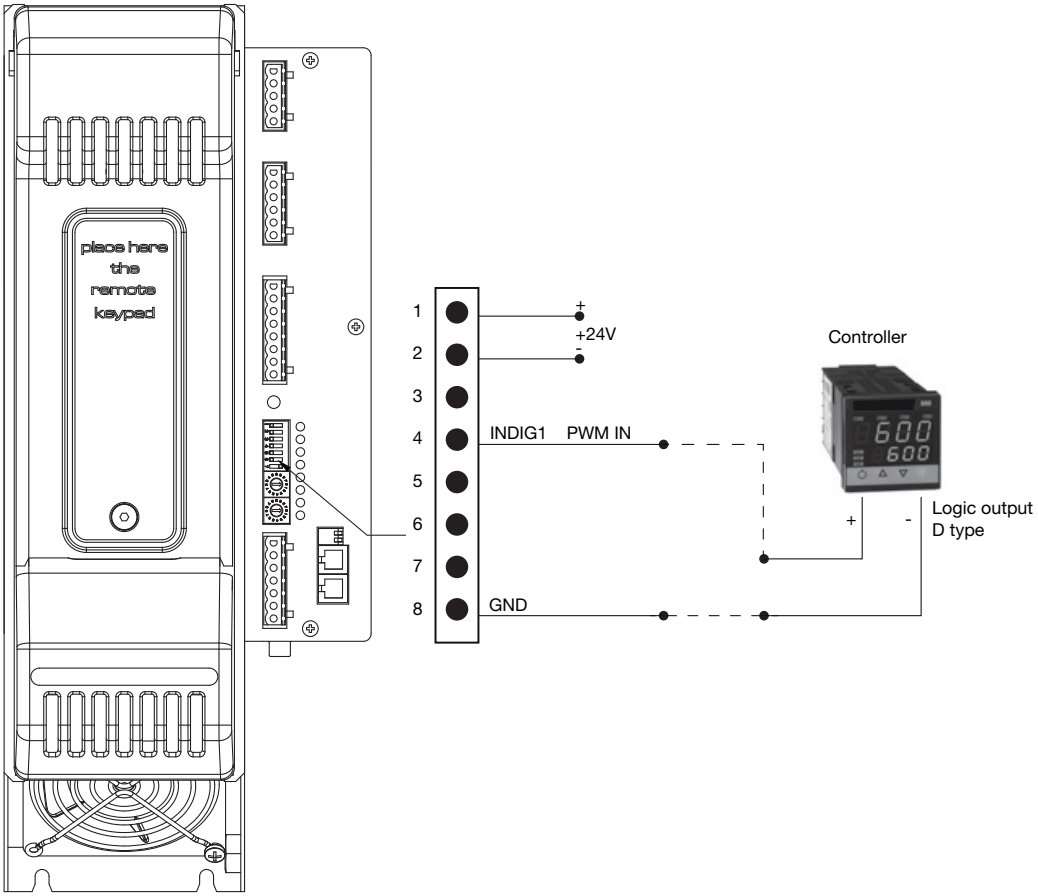

10. Installation of Modbus Serial Network

A network typically has a Master that “manages” communication by means of “commands,” and Slaves that carry out these commands.

ACPC modules is considered Slaves to the network master, which is usually a supervision terminal or a PLC.

It is positively identified by means of a node address (ID) set on rotary switches (tens + units).

A maximum of 99 ACPC, modules can be installed in a serial network, with node address selectable from “01” to “99”ì.

ACPC modules has a ModBus serial (Serial 1) and, op-tionally (see order code) a Fieldbus serial (Serial 2) with one of the following protocols: Modbus RTU, Profibus DP, CANopen, DeviceNet e Ethernet Modbus TCP.

The MODBUS RTU port 1 has the following factory set-tings (default):

Parameter	Default	Range
ID	1	1...99
BaudRate	19,2Kbit/s	1200...115kbit/s
Parity	None	parity/odd parity/none
StopBits	1	-
DataBits	8	-

The following procedures are indispensable for the Modbus protocol.For the other protocols, see the specific manuals.

The use of rotary switches (A...F) letters is for particular procedures described in the following paragraphs.

Here are the tables showing them:

Procedure	Positions of Rotary Switches		Description
	Tens	Units	
AutoBaud	0	0	It enables to set the correct BaudRate value automatically detecting the master transmission frequency

Autobaud Serial 1 Sequence

Adapt the serial communication speed and parity of the ACPC modules to the connected supervision termi-nal or PLC.

Green LED L1 “STATUS” mentioned in the procedure can vary its behavior based on parameter Ld.1, which is set to a default value of 16.

Procedure

1. Connect the serial cables for all modules on the network to serial 1 and to the supervision terminal.
2. Set the rotary switch on the ACPC modules to be installed, or on all modules present in case of first installation, to position “0+0”.
3. Check that the green “STATUS” LEDs flash at high frequency (10Hz).
4. The supervision terminal must transmit a series of generic “MODBUS” read messages to the network.
5. The procedure is over when all of the green L1 “STATUS” LEDs on the ACPC modules flash at a normal frequency (2Hz) (if parameter 197 Ld.1 = 16 as de-fault).

The new speed parameter is saved permanently in each ACPC; therefore, the “AUTOBAUD SERIAL 1” se-quence does not have to be run at subsequent power-ups.

When the rotary switch is turned, the green “STATUS” LED stays on steadily for about 6 seconds, after which it resumes normal operation and saves the address.

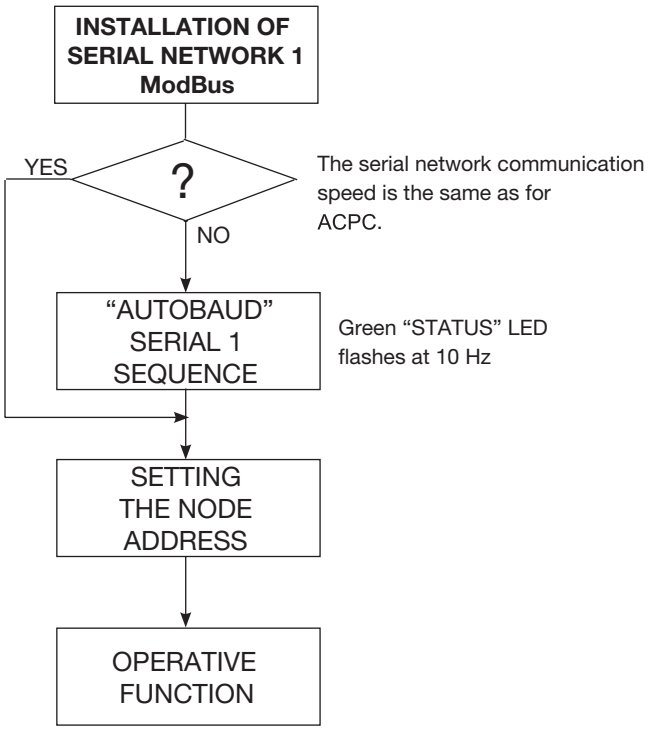

11. Technical Characteristics

INPUTS (40 to 300A Models)	
INA Analog Control Inputs	
Function	Acquisition of % value for power control
Voltage	Linear: 0,…,5Vdc, Ri>100Kohm Linear: 0,…,10Vdc, Ri>100Kohm
Current	Linear: 0/4…20mA, Ri =125ohm
Potentiometric	1, ..., 10Kohm, max 10mA from 5Vdc power ACPC
IN1 Analog Process Inputs (Option)	
Function	Acquisition of process variable
Max. error	0,2% f.s. ± 1 scale point at @ 25°C
Thermal drift	< 100 ppm/°C of f.s.
Sampling time	60 ms
Thermocouple Tc (ITS90)	J,K,R,S,T (IEC 584-1,CEI EN 60584-1, 60584-2) Error cold junction comp. 0,1°/°C
Resistance thermometer RTD (ITS90)	Pt100 (DIN 43760)
Max line resistance	20ohm
Voltage	Linear: 0,…,60mV, Ri>1Mohm 0,…,1V, Ri>1Mohm a 32-segment custom linearization can be inserted
Current	Linear: 0/4…20mA, Ri = 50ohm a 32-segment custom linearization can be inserted
Line Voltage Measurement, Current /Voltage (optional) on Load	
RMS line current measurement function	Line voltage read 50-60Hz; voltage in range: 90...530Vac for model with work voltage range 480Vac 90...660Vac for model with work voltage range 600Vac 90...760Vac for model with work voltage range 690Vac
Accuracy RMS voltage measurement	1% f.s. with neutral connected, 2% f.s. without neutral
RMS current measurement function	Load Current Read
Accuracy RMS current measurement	2% f.s. @25°C in start mode ZC e BF; in mode PA 2% f.s. with conduction angle >90°, 4% f.s. with conduction angle <90°
Function voltage measurement RMS on load	Load voltage read
Accuracy RMS voltage measurement on load	1% f.s. with VLOAD option measurement, (Otherwise, the value is calculated from the values of line voltage and power delivered; accuracy 2% F.S.)
Thermal drift for measure tension and current in the load, tension of line	<0,02%/°C
Current and Voltage sampling time	0,25 ms
INDIG1,…,INDIG3 Digital inputs	
Function	Configurable (default: disabled) Only for INDIG3: PWM input (100Hz/0,03Hz) to check the % value of power which depends on the cycle; this function lets you to set a power set point by means of a digital signal (ex. from PLC or controller with PWM output).
Type	5-30Vdc, 7mA isolation 1500V

OUTPUTS (40 to 300A Models)	
OUT1, …, OUT3 Heat Control Connected Directly to Solid-State Units	
Function	Configurable (default: heat control) State of control is displayed by LED (O1, ,O3) OUT1 is connected to Master unit, OUT2 and OUT3 are connected to Expansion units
OUT5,...,OUT8 Cooling Control Outputs (Option)	
Function	Configurable (default: cooling control)
Relay	Contact NO 3A, 250V/30Vdc cosϕ=1
Continuous	0/2…10V (default), max 25mA short circuit protection 0/4…20mA, max. load 500ohm isolation 500V
Logic	24Vdc, > 18V a 20mA
Triac	230V/ max 4A AC51 (1A for each channel)
OUT9, OUT10 Alarm	
Function	Function Configurable (default alarms)
Relay	Contact NO 5A, 250V/30Vdc cosϕ =1
COMMUNICATIONS PORTS (40 to 300A Models)	
PORT ACPC-OP	
Function	Serial comunication for KB-ADL terminal to display parameter programming
PORT 1 Always Present	
Function	Function Local serial communication
Protocol	ModBus RTU
Baudrate	Settable 1200,…,115200, (default 19,2Kbit/s)
Node address	Node address Settable with rotary-switches
Type	RS485 - isolation 1500V, double connector RJ10 telephone type 4-4
PORT2 (Fieldbus option)	
Function	Fieldbus serial communication
Protocol	ModBus RTU, type RS485, baudrate 1200...115000Kbit/s CANOpen 10K…1Mbit/s DeviceNet 125K…0,5Mbit/s Profibus DP 9,6K...12 Mbit/s Ethernet Modbus TCP 10/100Mbit/s Ethernet IP 10/100Mbit/s EtherCAT 100Mbps
POWER (SOLID-STATE RELAY) (40 to 300A Models)	
CATEGORY OF USE (Tab. 2 EN60947-4-3)	AC 51 resistive or low inductance loads AC 55b short wave infrared lamps (SWIR) AC 56a transformers, resistive loads with high temperature coefficient
Trigger Mode	**PA** - Load management by adjusting the firing angle (only configuration single-phase or delta open) **ZC** - Zero Crossing with constant cycle time (settable in range 1-200sec) **BF** - Burst Firing, or D.O.T. with variable cycle time optimized min. **HSC** - Half Single Cycle corresponds to Burst Firing that includes ON and OFF half-cycles. Useful for reducing flicker with short-wave IR loads (applied only to single-phase resistive or 3-phase 6-wire open delta loads).

Feedback Mode	**V, V^2:** Voltage feedback: proportional to RMS voltage value on load to compensate possible variations in line voltage. **I, I^2:** Current feedback: proportional RMS current value on load to compensate variations in line voltage and/or variations in load impedance. **W:** Power feedback: proportional to real power value on load to compensate variations in line voltage and/or variations in load impedance. You have to calibrate each time you change feedback mode.		
Max rated voltage	480Vac to 600Vac or 690V		
Work voltage range	90 - 530 Vac (480V Models)	90 - 660 Vac (600V Models)	90 - 760Vac (690V Models)
Non-repetitive voltage	1200 Vp	1600 Vp (600V Models)	1600 Vp (690V Models)
Rated frequency	50/60Hz auto-determination		
Critical Dv/dt with output deactivated	1000V/µsec		
Held nominal voltage of on the impulse	4KV		
Nominal current for short circuit condition	5KA		
Protection	RC, extrarapid fuses for SCR		
Rated current AC51 non-inductive or slightly inductive loads, resistance furnaces	**ACPC 40** Nominal current 40Arms @40°C in continuous service Non-repetitive overcurrent t=10ms: 1400A I^2t for blowout: 10000A^2s **ACPC 60** Nominal current 60Arms @40°C in continuous service Non-repetitive overcurrent t=10ms: 1500A I^2t for blowout: 12000A^2s **ACPC 100** Nominal current 100Arms @40°C in continuous service Non-repetitive overcurrent t=10ms: 1900A I^2t for blowout: 18000A^2s **ACPC 150** Nominal current 150Arms @40°C in continuous service Non-repetitive overcurrent t=10ms: 5000A I^2t for blowout: 125000A^2s **ACPC 200** Nominal current 200Arms @40°C in continuous service Non-repetitive overcurrent t=10ms: 8000A I^2t for blowout: 320000A^2s **ACPC 250** Nominal current 250Arms @40°C in continuous service Non-repetitive overcurrent t=10ms: 8000A I^2t for blowout: 320000A^2s **ACPC 300** Nominal current 300 Arms @ 40°C in continuous service Non-repetitive overcurrent t=10ms: 8000 A I^2t for blowout: 320000 A2s **NOTE (all models)** Minimum load controllable: 5 % of product current rated level.		
Thermic Dissipation	ACPC models dissipate thermic power based on load current: Pdissipation = I_load_Arms * 1.3V (W) For models with integrated fuse, also consider dissipated power at rated current shown on the fuse table ACPC models with electronic fuse (with internal IGBT) dissipate thermic power based on load current: Pdissipation = I_load_Arms * 2.8V (W)		
Rated current AC56A permitted trigger modes: ZC, BF con DT (Delay Triggering), PA with softstart	Derating: 20% of rated current value.		

FUNCTION (40 to 300A Models)	
Safety	Detection of short circuit or opening of inputs, absence of input feed, LBA alarm, HB alarm
Selection of °C/°F	Configurable
Linear scale range	-1999…9999
Action – control outputs	heat/cool – ON/OFF, PWM, GTT
Max limit heat/cool power	0,0…100,0 %
Fault power setting	-100,0…100,0 %
Shutdown function	Maintains sampling of PV; maintains control off
Configurable alarms	The alarm is assignable to an output and configurable as: maximum, minimum, symmetrical, absolute/deviation, LBA, HB
Alarm Masking	Exclusion at power-on, latch, reset from digital input
Energy Calculation	Totalizer of energy value supplied to load with local display by terminal and remote acquisition from fieldbus. Counters can be reset.
OPTIONS (40 to 300A Models)	
Options	- Timed Soft-Start firing ramp, with or without peak current control - Soft-Start firing ramp, specific for infrared lamps - Timed shut-off ramp - Limitation of RMS current in load - 0-90° Delay-Triggering for firing inductive loads in ZC and BF mode
Diagnostics	- SCR in short circuit (presence of current with OFF control) - No linear voltage - Fan supply power missing - No current due to open SCR/interrupted load • Overheat alarm (of power modules, of clamps for power cables, of fuse) Current reading • Calibration procedure using automatic threshold HB alarm from the value of the load current • Alarm load short circuit or overload Voltage reading • Input phase unbalanced • Wrong phase rotation in three-phase load configuration
Type of connection and load Selection via dip-switches	**- with one Master unit:** 1 single-phase load **- with one Master units and one Expansion:** 2 single-phase loads in ZC and BF trigger mode only: 1 phase load closed delta controlled on two phases 1 phase load star without neutral controlled on two phases - with one Master unit and two Expansions: 3 single-phase loads 3 independent single-phase loads open delta 1 phase load open delta 1 phase load closed delta 1 phase load star with neutral 1 phase load star without neutral

GENERAL DATA (40 to 300A Models)	
Power Supply	24Vdc ±10%, Clas II, max 8VA Max 10VA with ACPC-OP terminal - isolation 1000V
Fan power supply	24Vdc ±10%, 500mA @ 25Vdc
Signals	**Eight leds:** RN (Green) run state of CPU ER (Red) error signal DI1, DI2, (Yellow) state of digital inputs INDIG1, INDIG2 O1,O2,O3 (Yellow) state of power control BT (Yellow) state key HB
Protection	IP20
Work/storage temperature	0...+50°C (refer to dissipation curves) / -20...+85°C
Relative humidity	20…85% RH non-condensing
Ambient conditions for use	indoor use, altitude up to 2000m
Installation	panel with screws
Installation requirements	Installation category II, pollution level 2, double isolation Max. temperature of air surrounding device 40°C for temperature >40°C refer at derating curves - Device type: “UL Open Type”

INPUTS (400 to 600A Models)	
INA1, INA2, INA3 ANALOG CONTROL INPUTS	
Function	Acquisition of % value for power control
Voltage	Linear: 0,…,5Vdc, Ri>90Kohm Linear: 0,…,10Vdc, Ri>90Kohm
Current	Linear: 0/4…20mA, Ri =250ohm
Potentiometric	1, ..., 10Kohm, max 30mA from 5Vdc power ACPC
Line Voltage Measurement, Current /Voltage (optional) on Load	
RMS line current measurement function	Line voltage read 50-60Hz; voltage in range: 90...530Vac for model with work voltage range 480Vac 90...660Vac for model with work voltage range 600Vac 90...760Vac for model with work voltage range 690Vac
Accuracy RMS voltage measurement	1% f.s. with neutral connected, 2% f.s. without neutral
RMS current measurement function	Load Current Read
Accuracy RMS current measurement	2% f.s. @25°C in start mode ZC e BF; in mode PA 2% f.s. with conduction angle >90°, 4% f.s. with conduction angle <90°
Function voltage measurement RMS on load	Load voltage read
Accuracy RMS voltage measurement on load	1% f.s. with VLOAD option measurement, (Otherwise, the value is calculated from the values of line voltage and power delivered; accuracy 2% F.S.)
Inputs measuring current from external TAs	No. 3 inputs (optional) Input impedance: 16 mohm Input dynamic: 0 … 5 Arms Accuracy: 1% f.s.
Thermal drift for measure tension and current in the load, tension of line	<0,02%/°C
Current and Voltage sampling time	0,25 ms
INDIG1,…,INDIG3 Digital inputs	
Function	Configurable (default: disabled) Only for INDIG1, 2, 3: PWM input (100Hz/0,03Hz) to check the % value of power which depends on the cycle; this function lets you to set a power set point by means of a digital signal (ex. from PLC or controller with PWM output). The PWM function for INDIG1 is available within a frequency range of 100Hz / 0.03Hz, while for INDIG2 and INDIG3 the frequency range of the function is 1Hz / 0.03 Hz.
Type	5-30Vdc, 7mA isolation 1500V configurable as PNP or NPN

OUTPUTS (400 to 600A Models)	
OUT1, …, OUT3 Heat Control Connected Directly to Static Units	
Function	Configurable (default: heat control) State of control is displayed by LED (O1, O2,O3) OUT1 is connected to Master unit, OUT2 and OUT3 are connected to Expansion units
OUT5,...,OUT8 Cooling Control Outputs (Option)	
Function	Configurable
Relay	Contact NO 3A, 250V/30Vdc cosϕ=1
Analog	0/2…10V (default), max 25mA short circuit protection 0/4…20mA, max. load 500ohm isolation 500V Resolution: 12 bit Accuracy: 0.2% fs
Logic	24Vdc, > 18V a 20mA
Triac	230V/ max 4A AC51 (1A for each channel)
OUT9, OUT10 Alarm	
Function	Function Configurable (default alarms)
Relay	Contact in exchange (C, NO, NC) 5A, 250V/30Vdc cosϕ =1
COMMUNICATIONS PORTS (400 to 600A Models)	
PORT ACPC-OP	
Function	Serial comunication for KB-ADL terminal to display parameter programming
PORT 1 Always Present	
Function	Function Local serial communication
Protocol	ModBus RTU
Baudrate	Settable 1200,…,115200, (default 19,2Kbit/s)
Node address	Node address Settable with rotary-switches
Type	RS485 - isolation 1500V, double connector RJ10 telephone type 4-4
PORT2 (Fieldbus option)	
Function	Fieldbus serial communication
Protocol	ModBus RTU, type RS485, baudrate 1200...115000Kbit/s CANOpen 10K…1Mbit/s DeviceNet 125K…0,5Mbit/s Profibus DP 9,6K...12 Mbit/s Ethernet Modbus TCP 10/100Mbit/s Ethernet IP 10/100Mbit/s EtherCAT 100Mbps

POWER (SOLID-STATE RELAY) (400 to 600A Models)			
CATEGORY OF USE (Tab. 2 EN60947-4-3)	AC 51 resistive or low inductance loads AC 55b short wave infrared lamps (SWIR) AC 56a transformers, resistive loads with high temperature coefficient		
Trigger Mode	**PA** - Load management by adjusting the firing angle (only configuration single-phase or delta open) **ZC** - Zero Crossing with constant cycle time (settable in range 1-200sec) **BF** - Burst Firing, or D.O.T. with variable cycle time optimized min. **HSC** - Half Single Cycle corresponds to Burst Firing that includes ON and OFF half-cycles. Useful for reducing flicker with short-wave IR loads (applied only to single-phase resistive or 3-phase 6-wire open delta loads).		
Feedback Mode	**V, V^2:** Voltage feedback: proportional to RMS voltage value on load to compensate possible variations in line voltage. **I, I^2:** Current feedback: proportional RMS current value on load to compensate variations in line voltage and/or variations in load impedance. **W:** Power feedback: proportional to real power value on load to compensate variations in line voltage and/or variations in load impedance. You have to calibrate each time you change feedback mode.		
Max rated voltage	480Vac to 600Vac or 690V		
Operating1 voltage range	90 - 530 Vac (480V Models)	90 - 660 Vac (600V Models)	90 - 760Vac (690V Models)
Non-repetitive voltage	1200 Vp	1600 Vp (600V Models)	1600 Vp (690V Models)
Rated frequency	50/60Hz auto-determination		
Critical Dv/dt with output deactivated	1000V/µsec		
Held nominal voltage of on the impulse	4KV		
Nominal current for short circuit condition	5KA		
Protection	RC, extrarapid fuses for SCR		
Rated current AC51 non-inductive or slightly inductive loads, resistance furnaces	**ACPC 400** Nominal current 400Arms @ 50°C in continuous service Non-repetitive overcurrent t=10ms: 8000 A I2t per fusione: 1.050.000A^2s **ACPC 500** Nominal current 500 Arms @ 50°C in continuous service Non-repetitive overcurrent t=10ms: 15.000 A I2t per fusione: 320000 A^2s dV/dt critical: 1000V/µs **ACPC 600** Nominal current 600Arms @ 50°C in continuous service Non-repetitive overcurrent t=10ms: 15.000 A I^2t for blowout: 1.125.000 A^2s **NOTE (all models)** Minimum load controllable: 5 % of product current rated level.		
Thermic Dissipation	ACPC models dissipate thermic power based on load current: Pdissipation = I_load_Arms * 1.3V (W) For models with integrated fuse, also consider dissipated power at rated current shown on the fuse table ACPC models with electronic fuse (with internal IGBT) dissipate thermic power based on load current: Pdissipation = I_load_Arms * 2.8V (W)		
Rated current AC56A permitted trigger modes: ZC, BF con DT (Delay Triggering), PA with softstart	Derating: 20% of rated current value.		

FUNCTION (400 to 600A Models)	
Options	- Timed Soft-Start firing ramp, with or without peak current control - Soft-Start firing ramp, specific for infrared lamps - Timed shut-off ramp - Limitation of RMS current in load - 0-90°
Diagnostics	- SCR in short circuit (presence of current with OFF control) - No linear voltage - Fan supply power missing - No current due to open SCR/interrupted load • Overheat alarm (of power modules, of clamps for power cables, of fuse) Current reading • HB Alarm: Interrupted or partially interrupted load • Calibration procedure using automatic threshold HB alarm from the value of the load current • Alarm load short circuit or overload Voltage reading • Input phase unbalanced • Wrong phase rotation in three-phase load configuration
Energy Calculations	Total energy value supplied to load with local display by terminal and remote acquisition from fieldbus. Counters can be reset.
Type of connection and load selection via dip-switches	- with one Master unit (ACPC1): 1 single-phase load - with one Master units and one Expansion (ACPC2): 2 single-phase loads in ZC and BF trigger mode only: 1 phase load closed delta controlled on two phases 1 phase load star without neutral controlled on two phases **- with one Master unit and two Expansions (ACPC3):** 3 single-phase loads 3 independent single-phase loads open delta 1 phase load open delta 1 phase load closed delta 1 phase load star with neutral 1 phase load star without neutral
GENERAL DATA (400 to 600A Models)	
Power Supply	ACPC 1PH-400/500/600A: 24Vdc +/- 10% max 38W ACPC 2PH-400/500/600A: 24Vdc +/- 10% max 66W ACPC 3PH-400/500/600A: 24Vdc +/- 10% max 94W
Fan power supply	24Vdc ±10%, 500mA @ 25Vdc
Signals	**Eight leds:** RN (Green) run state of CPU ER (Red) error signal DI1, DI2, (Yellow) state of digital inputs INDIG1, INDIG2 O1,O2,O3 (Yellow) state of power control BT (Yellow) state key HB
Protection	IP20
Work/storage temperature	0...+50°C (refer to dissipation curves) / -20...+85°C
Relative humidity	20…85% RH non-condensing
Ambient conditions for use	indoor use, altitude up to 2000m
Installation	panel with screws
Installation requirements	Installation category II, pollution level 2, double isolation Max. temperature of air surrounding device 40°C for temperature >40°C refer at derating curves - Device type: “UL Open Type”

11.1 Derating Curves

ACPC 40/60/250/300A

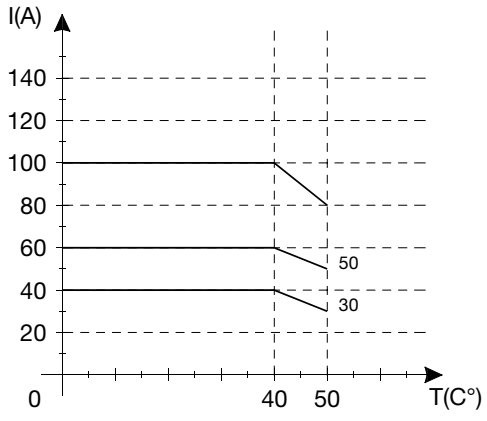

ACPC 150/200/250/300A

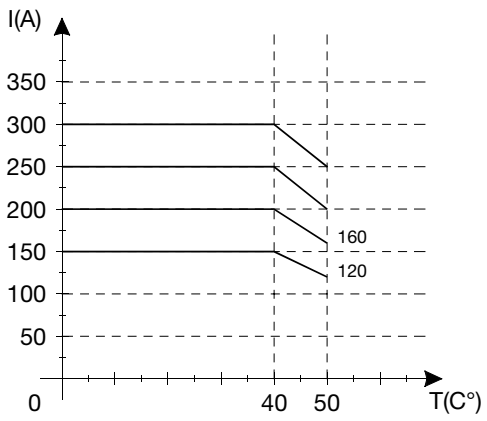

ACPC 400/500/600A

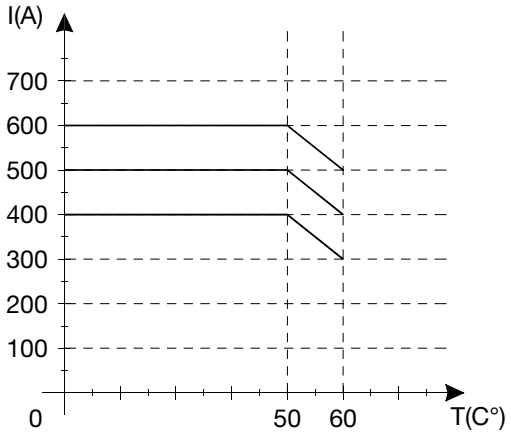

12. Ordering Information

Ordering Information

To Order — Complete the Model Number using the Matrix provided.

Model ACPC Advanced Modular SCR Power Controller

ACPC1 Single Phase
ACPC2 Three Phase, 2-leg
ACPC3 Three Phase, 3-leg

Code	Current @ 104˚F (40˚C) Ambient, continuous service				
040	40 Amps	**200**	200 Amps	**500**	500 Amps
060	60 Amps	**250**	250 Amps	**600**	600 Amps
100	100 Amps	**300**	300 Amps		
150	150 Amps	**400**	400 Amps		

Code	Nominal Voltage
48	480 Vac [1]
60	600 Vac [1]
69	690 Vac

Code	Blank
0	None

Code	Blank
0	None

Code	Control Options
0	None
1	Current limit
2	Current limit and feedback V,I,P
3	Current limit and feedback V,I,P + V Load input
4	Current limit and feedback V,I,P+ Vload input; CT external inputs [2]

Code	Auxiliary Output		
0	None	**W**	3 Analog outputs 12 bit 0-10V, 4-20mA [2]
R	4 Relays		
D	4 Digital outputs		

Code	Diagnostic/Alarm option
0	None
1	Partial or total load failure alarm (HB)

Code	Fusing
0	None
1	Internal

Code	Communications		
00	None	**EP**	Ethernet IP
MR	Modbus RTU/RS485	**ET**	Modbus TCP/IP
PB	Profibus DP	**PS**	Profinet w/ Stack Protocol 3.12.0.5
CN	CANopen	**ES**	EtherCAT w/ Stack Protocol 4.7.0.3

ACPC1-	040	48-	0	0	2	R	0-	0	MR	Typical Model Number

[1]Not available on models with rated current >=400A

[2]Not available on models with rated current <=250A

Accessories

Description	PCN
Communication Cable, USB to RS485	309180

13. Accessories

C-PWR Software

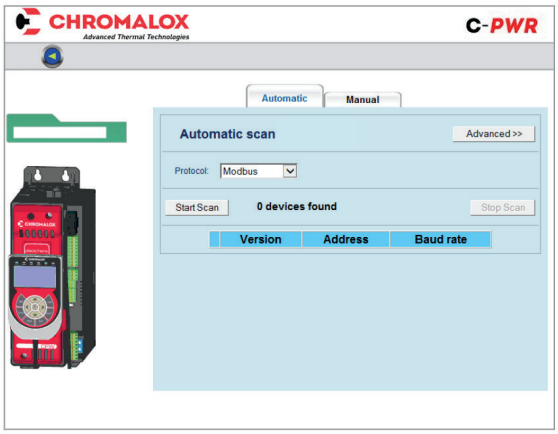

Configuration/supervision kit for ACPC by means of PC with USB (Windows environment).

Lets you read or write all of the parameters of a single ACPC

A single software for all models

- Easy and rapid configuration
- Saving and management of parameter recipes
- On-line trend and saving of historical data

Component Kit:
- Connection cable PC USB <----> ACPC RS485 port
- Serial line converter
- C-PWR Digital Download http://www.chromalox.com/en/resources-and-support/software

Fuses – Extra Rapid

EXTRARAPID FUSES				
Model	Size I^2t	Code Format	Part Number	Power Dissipated @ In.
ACPC 40	80A 2500A^2 S	FUS-080S	0024-07826	5 W
ACPC 60	125A 8900A^2 S	FUS-125S	0024-07819	6 W
ACPC 100	160A 16000A^2 S	FUS-160S	0024-07827	12 W
ACPC 150	200A 31500A^2 S	FUS-200S	0024-07820	19 W
ACPC 200/250 480/600V	450A 196000A^2 S	FUS-450S	0024-07821	17 W
ACPC 200/250/300 690V	400A 150000A^2 S	FUS-400S	0024-07822	20 W

ULTRARAPID FUSES				
Model	Size I^2t	Code Format	Part Number	Power Dissipated @ In.
ACPC 400	630A 31000A^2s	FUS-630S	0024-07835	60 W
ACPC 500	1000A 97000A^2s	FUS-1000	0024-07828	50 W
ACPC 600	1000A 97000A^2s	FUS-1000	0024-07828	60 W

GG Fuses

An electrical protection device known as a GG FUSE must be used to ensure protection against short-circuit of the electrical cable (see EN 60439-1, paragraph 7.5 Short-circuit protection and short-circuit withstand strength" and 7.6 "Switching devices and components installed in ASSEMBLIES", or the equivalent paragraphs of standard EN 61439-1).

Limited Warranty:
Please refer to the Chromalox limited warranty applicable to this product at
http://www.chromalox.com/customer-service/policies/termsofsale.aspx.

Chromalox, Inc.
1347 Heil Quaker Boulevard
Lavergne, TN 37086
(615) 793-3900
www.chromalox.com